=$;NO@J8

%j%+%l%s%H%K%e!<%i%k%M%C%H%o!<%/K*1k
;~4VO"B3>uBV5!3#$N<B8=

;XF3654 1 IYEDbC<#65<x

5~ETBg3XBg3X1!>pJs3X8&5f2J
=$;N2]DxDL?.>pJs%7%9%F%'@l96

DEED98<w

J?@.15G/27n7F|

%j%+%l%s%H%K%e!<%i%k%M%C%H%o!<%/K*1k
;~4VO"B3>uBV5!3#$N<B8=

DEED98<w

FbMF9<35

%j%+%l%s%H!&K%e!<%i%k!&M%C%H%o!<%/(RNN)$O%U%#!<%I%P%C%/!&k!<%W$r;}$D%K%e!<%i%k!&M%C%H%o!<%/$G$"$k!#3N%U%#!<%I%P%C%/!&k!<%WKhCF!"RNN$O;~7ONs>pJs$r=hM}9k3H$,$G$-$k!#7+$bO"B3CM$r07$($k3H$+$i!"RNN$OO"B3>uBV5!3#$H8FPl$kG=NO$N9b$55!3#%/%i%9$rDs6!9k!#O"B3>uBV5!3#HO!"O"B3$J>uBV6u4V$K$*$$FN;6E*$J>uBVA+0\$r9T$&$bNG$"$k!#

7+$7!"RNN$O;~4V$rO"B3E*$K07$($k!#$=$3$G2f!9$O!";~4VO"B3>uBV5!3#$H$$$&?7$7$5!3#%/%i%9$rDs>'$7$?!#;~4VO"B3>uBV5!3#$O!";~4VO"B3$J>uBV6u4V$H$=$N>e$N>uBVA+0\$KhC$FDj5A$5lk!#3l$r%(%]%C%/KhDL;~E*8m:95UEAHBK!$H65;U6/@)$rMQ$$F!"RNN$K3X=,$5$;$kJ}K!$rDs0F$9$k!#

;~4VO"B3$JF~=PNO7ONs$r3X=,9k:]$NLdBj$O2D"$k!#1$DL\$O!";~4VO"B3$KJQ2=$9$kF~NO$KBP$7!"65;U?.9f$r$$$+$KDj5A$9k+G"$k!#2$DL\$O!";~4V6I=jE*$KF10l$JF~NO$KBP$70[Jk65;U?.9f$r$$$+$K3X=,$9k+G"$k!#

1$DL\$NLdBjKBP72f!9$O!"3X=,Cf$K65;U?.9fr=$N;~$NRNN$N=PNO$K1~8FE,1~E*$KJQ2=$5$;$k3HK9$k!#=PNO$r65;U?.9fH9k3HG!"F~NO$,O"B3E*$KJQ2=7F$$k6h4VK*1k8m:9$r0$H$7!"@Q6KE*$K=PNO$rJQ2=$5$;$J$$h$&$K9k!#2$DL\$NLdBjKBP72f!9$O!"0lDj;~9oA0$N65;U?.9f$rF~NO$H9k3HK9$k!#;~4V6I=jE*$KF~NO$,F10l$G65;U?.9f$,0[$J$k6h4V$K$*$$F$b!"0[$J$kF~NO$,F~k3HG!"<1JL7d$9$$$h$&$K9k!#

K\9FGO!";~4VO"B3>uBV5!3#H7$F!";~4VO"B3$JF~NO$N%]%8%F%#%V%(%C%8%H%j%,$N1bit-%b%8%e%m!&+%&%s%?$rRNN$K3X=,5;$?!#$^$:!"F~NO$NJQ2=;~4V0lDj$N7%Q%?!<%s$r%H%l!<%K%s%0!&;%C%HH7$F!"DL>o$NRNN$H0lDj;~9oA0$N65;U?.9f$rF~NO$KDI2C7?RNN$N3X=,$N<}B+N($rHf3S$7$?!#$=$N7k2L!"%K%e!<%m%s?t168D$K$*$$F!"A0<T$,A4$/<}B+7J$+$C$?$N$KBP$7!"8e<TGO55%<}B+7?!#B3$$F!"F~NO$NJQ2=;~4V$,0[Jk%Q%?!<%s$b%H%l!<%K%s%0!&;%C%H$K2C$($F!"K\<jK!$rMQ$$F3X=,7?H3$m!"3X=,$KMQ$$?JQ2=;~4VFbNG0U$N%]%8%F%#%V%(%C%8$KBP$71bit-%b%8%e%m!&+%&%s%?$,<B8=G-$?!#

Implementation of Temporally Graded State Machine based on Recurrent Neural Network

Akihisa Tsuda

Abstract

A Recurrent Neural Network is a Neural Network with feedback loops. These feedback loops enable RNN to handle time series information. And RNN can deal with real numbers, and is classified as powerful machine: Graded State Machine. GSM has continuous states and discrete transitions.

But RNN can deal with time continuously. We supposed a new machine class : Temporally Graded State Machine. TGSM has continuous states and continuous transition. We supposed the method to make RNN learn TGSM with Epochwise Back Propagation Through Time and Teacher Forcing.

RNN has two problems to learn continuous input and output sequences. The first is how we define teacher signals for inputs varing temporally. The second is how RNN learns different teacher sequences for same input sequences in local time.

For the first, we suppose that teacher signals are adaptive for outputs of RNN on each time in learing. Mean Square Error is zero in the terms in which inputs vary temporally by which outputs substitute for teacher signals in those. Therefore, outputs don't vary positively in those. For the second, we suppose RNN of which inputs are added teacher signals before some times. It helps RNN for the discrimination in the terms in which input sequences are same and teacher sequences are different.

In this paper, RNN learned a positive edge trigger 1bit modulo counter with continuous input sequences. We compared the convergency rate of learning in the normal RNN with that in the RNN of which inputs are added teacher signals before some times, in the 7 training sets whose inputs vary temporally constantly. Then, the former was 0 % and the latter was 55 % in 16 neurons. Next, RNN learned the training sets added patterns whose input vary temporally not-constantly, with above method. Then, RNN became 1bit modulo counter in arbitary input patterns of above varing time.

%j%+%l%s%H%K%e! <%i%k%M%C%H%o! <%/K*1k

;~4VO"B3>uBV5!3#$N<B8=

L\<!

Bh**1** >O O8aK **1**

Bh**2** >O GX7J **4**

2.1 O"B3>uBV5!3#$H%j%+%l%s%H%M%C%H 4

2.1.1 O"B3>uBV5!3# 5

2.1.2 %j%+%l%s%H%M%C%H 6

2.1.3 4XO"8&5f 11

2.2 %j%+%l%s%H%M%C%H$N3X=, ... 17

2.2.1 BPTT 18

2.2.2 EBPTT 20

2.2.3 RTBPTT 22

2.2.4 65;U6/@) 23

Bh**3** >O ;~4VO"B3>uBV5!3#H=$N3X=,J}K! **27**

3.1 ;~4VO"B3>uBV5!3# 27

3.2 3X=,K*1k=tLdBj$H2r7hK! 29

3.2.1 65;U?.9f 30

3.2.2 :NMQ9k%j%+%l%s%H%M%C%H$N%b%G%k 32

3.2.3 3X=,J}K! 34

Bh**4** >O %j%+%l%s%H%M%C%HK*1k;~4VO"B3>uBV5!3#$N<B8= **39**

4.1 CY1d$N8z2L 39

4.2 ;~4VO"B3>uBV5!3#$N<B8= 44

Bh**5** >O $*$ojK **49**

<U<- **51**

;29MJ88% **52**

Bh1>O O8aK

%K%e!<%i%k!&M%C%H%o!<%/(**Neural Network**!"0J2<%K%e!<%i%k%M%C%HH9$k)!&b%G%k$O!"CNE*$J>pJs=hM}$KBP9k=>Mh$N7W;;E*$J%"%W%m!<%AGO!";W9M$d8@8l$H$$$C$??M4V$N;}$D9b<!$N>pJs=hM}G=NO$N$$/D+$N=EMW$JB&LLr&$^$/@bL@9k3H$,$G$-$J$$@$m&$H$$&46?($+$i@8$^$lF-$?!#

$=$lKb4Xoi$:DL>o$N%K%e!<%i%k%M%C%H$O!"9b<!$N>pJs=hM}KI,MWJ$$/D+$N5!G=$r&$^$/<B8=9k3H$,$G$-$J$$!#$=$liNCfKO!$2DJQD9%G!<%?$N<h$j07$$,$"$k!#3AX%b%G%k$KBeI=$5lkDL>o$N%K%e!<%i%k%M%C%H$O!"8GDjD9$N%Q%?!<%s=hM}$r4pK\$H7F$*$j!"2DJQD9$N%G!<%?$r&$^$/07$&$3H,G-$J$$!#

0lJ}!"5-9f=hM}$KBeI=$5lk=>Mh$N7W;;E*$J%"%W%m!<%AGO!"LISP$N%j%9%H$JINNc$r;}$A=P9^GbJ/!"2DJQD9$N%G!<%?$rMF0W$K<h$j07$&$3H,G-$k!#FC$K5-9f=hM}$O!"?M9)CNG=$N4pK\5;=QH7$FMQ$$$ilF$-$?$,!"2DJQD9%G!<%?$N<h07$$,MF0WG"C?3H$,$=$NM}M3$N1DH7F5s2ilh$&!#

7+$7!"5-9f=hM}$JIG$b!"2DJQD9%G!<%?$,$=$N$^$^N7A$G=hM}$5lF$$$ko1GO$J$$!#$=$liO%*!<%H%^%H%sK=$N4pAC$rCV$$$F$$$k$,!"$=$N%*!<%H%^%H%s$b2DJQD9$N%G!<%?$r$=$N$^^{07}&$3HOG-$J$$!#%*!<%H%^%H%s$NF~NO$OM-8B8D$N%"%k%U%!%Y%C%H$G$"$j!"dO$j8GDjD9$G$"$k!#%*!<%H%^%H%s$,2DJQD9$N%G!<%?$r07$&H-KO!"$^$:$=$l$r8GDjD9%G!<%?$N;~7CNs$KJ,2r$9kI,MW,$"$k!#%*!<%H%^%H%s$O!"8GDjD9%G!<%?$N;~7CNsKBP9$k=hM}$H7F!"2DJQD9%G!<%?KBP9$k=hM}$r<B8=7F$$kNG$"$k!#

%j%+%l%s%H!&K%e!<%i%k!&M%C%H%o!<%/(**Recurrent Neural Network**, 0J2<%j%+%l%s%H%M%C%HH9$k)$O!"%U%#!<%I%P%C%/!&k!<%W$r;}$D%K%e!<%i%k%M%C%HN3HG$"$k!#%j%+%l%s%H%M%C%H$N%U%#!<%I%P%C%/!&k!<%W$O!">uBV5!3#K*1k%U%#!<%I%P%C%/!&k!<%W$HF1MM$K!"F~NO$NMzNr$r$=$N>uBVH7$FBeI=$5$;$k3H$,$G$-$k!#7?$,$C$F!"%j%+%l%s%H%M%C%H$ODL>oNAH_9go;2sO)E*$J%K%e!<%i%k%M%C%H$H$OO[$J$j!"%*!<%H%^%H%s$HF1MM$N;~7CNs=hM}$r9T$&$3H,G-$k[1]!#

;W9M$d8@8l$H$$$C$??M4V$N9b<!>pJs=hM}$b;~7CNs=hM}$G$"$k$H9M$(il$k!#$7$?$,CF!"%j%+%l%s%H%M%C%H$N;~7CNs=hM}$O!"3&$$$C$??M4V$N9b<!>pJs=hM}$r<B8=!"2rL@$9$k>e$GNBg-$J;e8}$rM?$($kbN$H4|BT$5lF$$$k!#

$^$?!"3Nh&$J?M4V$N;}$D9b<!>pJs=hM}$r;~7ONs=hM}H7FHi($k8+J}$O!"%j%+%l%s%H%M%C%H $H%*!<%H%^%H%s $NBPHf$H$$$&=EMW$J;kE@$rDs6!9k!#%*!<%H%^%H%s $O@8@.J8K!M}O@$HL)@\$J4X78$r;}$C$F$$$k$?$a!"%j%+%l%s%H%M%C%H $r%*!<%H%^%H%s H7FHi(k3HKhC$F!"@8@.J8K!$H$N4X78$r5DO@9k3H$,$G$-$kh&KJ$k!#

<B:]!"McClelland $i([2] [3]) $O!"O"B3>uBV5!3#(**Graded State Machine**) $H$$$&%/%i%9$rDs0F$7$F$$$k!#O"B3>uBV5!3#HO!"O"B3E*$J>uBV6u4V$H$=$N>e$NN%;6E*$J>uBVA+0\$KhC$FDj5A$5lk%*!<%H%^%H%s G"$k!#C1=c2s5"7k9g2sO)LV(Simple Recurrent Network) $O!"%j%+%l%s%H%M%C%H $N:G$b4JC1JNcN1DG$"$k$,!"O"B3>uBV5!3#$G$"$k3H$,J,$+CF$$$k!#

O"B3>uBV5!3#$O!"$=$NO"B3E*$J@-<AKhCF!"M-8B>uBV5!3#hj9b$$G=NO$r;}$D!#$=$N$?$aO"B3>uBV5!3#$O!"<+A38@8l$N=hM}$KBeI=$5lk?M4V$N9b<!>pJs=hM}$K==J,$JG=NO$r;}$D2DG=@-$,$"$k$H9M$(il$F$$$k!#

7+$70lHL$K$O!"=hM}$5$;$?$$$F~NO$,;~4VJ}8~$KN%;6E*$J;~7ONs$G$"$k3H$O5)$G!"Nc$($P!"2;@<G'<1$d3t2AM=B,$JINh&$J!";~4VJ}8~$KO"B3E*$KJQ2=$7J,$iO"B3E*$JCMrH$k;~7ONs$G$"$k3H$,B?$$!#$=$7$F!"%j%+%l%s%H%M%C%H $O;~4VJ}8~$KO"B3$JF~NO$r=hM}9k3H$,$G$-$k!#

$=$lKb4Xoi$:!"=>Mh$N%j%+%l%s%H%M%C%H $N8&5f$G$O!"=hM}$9$kF~NO$,;~4VJ}8~$KN%;6E*$J;~7ONsG"k3H,B?$/!";~4VJ}8~$KO"B3$J>l9g$O$[$HsI8&5f5lF3J+C?!#$=$3$G2f!9$O!$;~4VJ}8~$K$bO"B3E*$J>uBV6u4V$H!"$=$N>e$N!";~4VJ}8~KbO"B3E*$J>uBVA+0\$r;}$D O"B3>uBV5!3#$r;~4VO"B3>uBV5!3#(**Temporally Graded State Machine**) $H8F$V3H$rDs>'$7!"3l$r%j%+%l%s%H%M%C%H $K3X=,$5$;$kJ}K!$rDs0F$9$k!#

bAms!"7W;;5!$OO"B3CM$r07$&$3H,G-$J$$!#hC$F7W;;5!>e$G%b%G%k$r07$&0J>e!";~4V$N:G>.C10L;~4V$rDjakI,MW$,$"$j!"87L)$K$O;~4VJ}8~$KN%;62=5lk3HKJk!#

7+$7!"Nc$($PM-8B8D$N%"%k%U%!%Y%C%H$G9=@.$5lkN%;6Ns$r=hM}$9kNHOK\<AE*$K0[$J$k!#$"$k=V4V$KF~NO$,$H$jF@$kCM$N<dN'$O!"7W;;5!$N@:EY$K@)8B$r<u$1kbNNL58BG"$k!#$^$?6K>.;~4V$GF~NO$NJQ2=$r8+$?>l9g!"$=$lOF~NO$,HjF@kCMNA40hKHfYkH6O$+$JJQ0L$K<}$^$k!#N%;6Ns$Nh&$K!"Bg$-$/0[$JkCMK=V4VE*$KJQ2=$9k3HO$J$$!#

0J2<2>OGO!"O"B3>uBV5!3#$H%j%+%l%s%H%M%C%H$N4X78KD$$$F=RYk!#B3

$$$F! "%j%+%l%s%H%M%C%H$N0lHLE*$J9=@.K!G"$k3X=,%"%k%4%j%:%`$K$D$$F=R
Yk!#<!$K3>O$G!";~4VO"B3>uBV5!3#$H!"$=lr<B8=9k$?$a$N3X=,J}K!$K$D
$$$F=RYk!#2f!9$O!"0lHLE*$J%j%+%l%s%H%M%C%H$HF1MM$K!"3X=,Kh$j%j%+
%l%s%H%M%C%H$r9=@.$9k,!"0lHLE*$J%j%+%l%s%H%M%C%H$H0[Jj!"F~NO$,;~
4VO"B3G"k3H+$i!"EvA3$=$N3X=,K!$b0[Jk!#$=$3$G!"%j%+%l%s%H%M%C%H
$K;~4VO"B3>uBV5!3#$r3X=,5;$k:]$N=tLdBj$H2r7hK!$K$D$$F=RYk!#1>O$G
$O!"$=$N2r7hK!$N8z2L!"$*$h$S!"<B:]$K;~4VO"B3>uBV5!3#$N4JC1$JNcH7$F!"
;~4VO"B3$JF~NO$KBP7F%]%8%F%#%V%(%C%8%H%j%,$N1bit-%b%8%e%m!&+%&%s%?$H
7FF0:n9k%j%+%l%s%H%M%C%H$r9=@.$7$?$N$G!"$=$N7k2L$r=RYk!#:G8e$K!"
$^$Har9T$&!#

Bh2>O GX7J

%U%#!<%I%P%C%/!&k!<%W$r;}$C$?%K%e!<%i%k%M%C%H$G$"$k%j%+%l%s%H%M%C%H$O!";~7CNs=hM}$r9T$($k$?$a!">uBV5!3#HNBPHfr9k3H,G-$k!#<B:]!"McClelland iKhkO"B3>uBV5!3#$NDs0F$b!">uBV5!3#HNBPHf$H$$&;kE@$+$i@8$^$l$?$bNG$"$k!#

$=$3$G0J2<$G$O!"$^$:<!@a$GO"B3>uBV5!3#$H%j%+%l%s%H%M%C%H$N4X78KD$$$F=RYk!#O"B3>uBV5!3#KD$$$F!"M-8B>uBV5!3#HNHf3S$r8r$($F@bL@$7!"$^$?$=$NG=NOKD$$$F$b=R$Y$k!#B3$$$F!"%j%+%l%s%H%M%C%HKD$$$F$b35@b$7!"$=$l$,O"B3>uBV5!3#$HINh&$J4X78$K$"$k$+@bL@$9$k!#$5iK!"%j%+%l%s%H%M%C%H$NG=NO$d!"6qBNE*$J1~MQNc$K$D$$$F$b=R$Y$k!#

B3$$F2.2@aK*$$$F!"%j%+%l%s%H%M%C%H$N3X=,%"%k%4%j%:%`$K$D$$F=R$Y$k!#%j%+%l%s%H%M%C%H$N3X=,%"%k%4%j%:%`$O3,AX7?%K%e!<%i%k%M%C%H$HF1MM$K:G5^9_2<K!$K4p$E$/$bN,0lHL$KMQ$$$ilk!#$=$3$G!"$=$NBeI=E*$JbNKD$$F=RYk!#

2.1 O"B3>uBV5!3#$H%j%+%l%s%H%M%C%H

O"B3>uBV5!3#HO!"O"B3CM$N>uBV>pJs$rMxMQG-$k>uBV5!3#$G$"$k!#3NO"B3CM$r07$($k!"$H$$$&E@K*$$F!"O"B3>uBV5!3#$OM-8B>uBV5!3#$hjb9b$$G=NO$r;}$D!#

$^$?!"O"B3>uBV5!3#$O0lHL$K%j%+%l%s%H%M%C%HKhCF<B8=5l$k!#$3lO!"%j%+%l%s%H%M%C%H$,@h$K=RY?h$&$K;~7CNs=hM}$r9T$&3H$,$G$-!"$+$DO"B3CM$r07$&$3H,G-k3HKhk!#

$=$3$G0J2<!"$^$:2.1.1@a$GO"B3>uBV5!3#KD$$$FM-8B>uBV5!3#HNHf3S$r8r$($F@bL@$7!"$^$?$=$NG=NOKD$$$F$b=R$Y$k!#B3$$$F2.1.2@a$G!"O"B3>uBV5!3#$r<B8=9k:]$K0lHL$KMQ$$$ilk%j%+%l%s%H%M%C%HKD$$F35@b9k!#%j%+%l%s%H%M%C%H$N9=@.MWAG$O%K%e!<%m%sG"$k!#$3$N%K%e!<%m%s$N%b%G%kKD$$F$^$:@bL@9k!#$=$7$F!"$=$N%K%e!<%m%s!&b%G%k$,INh&$K%j%+%l%s%H%M%C%H$r9=@.$7F$$k$+$K$D$$F@bL@9k!#$^$?!"%j%+%l%s%H%M%C%H$HM-8B>uBV5!3#$NF0:n$rBPHf$9$k!#%j%+%l%s%H%M%C%H$OM-8B>uBV5!3#$rLOJo$G$-!"$5iKO"B3CM$r07$(k3H+$i!"O"B3>uBV5!3#$,9=@.G-k3Hr@bL@9k!#$=$7F2.1.3@aK*$$F!"O"B3>uBV5!3#$N=>Mh$N8&5fKD$$F=RYk!#$^$:!"

O"B3>uBV5!3# $r9=@.$9$k %j%+%l%s%H%M%C%H $NG=NO$K$D$$F=RYk!#$=$7$F!"
$=$N6qBNE*$J1~MQNc$H7F McClleland iKhC$F9T$Jol$?8&5f$K$D$$F=R
Yk!#

2.1.1 O"B3>uBV5!3#

O"B3>uBV5!3# HO!"Bh1 >O$G=R$Y$?$h$&$K!"O"B3E*$J>uBV6u4V$H$=$N>e$NN%
;6E*$J>uBVA+0\$KhC$FDj5A$5lk%*!<%H%^%H%s G"$k!#$=3G0J2<GO!"$3
lr6qBNE*$K@bL@$9k?aK!"$^$:$=$NF~=PNO$d>uBVA+0\$NMM;R$r!"M-8B>uBV
5!3#$HHf3S$9$k!#B3$$FO"B3>uBV5!3#$NG=NO$K$D$$F=RYk!#

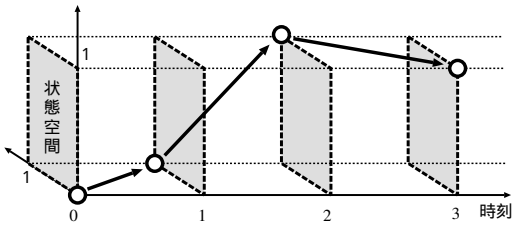

?^1: M-8B>uBV5!3#K*1k>uBVA+0\

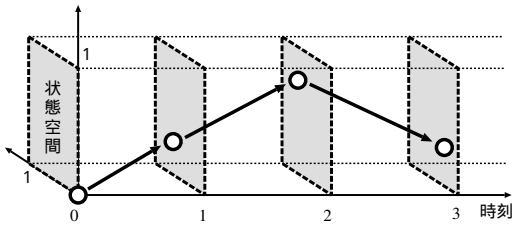

?^2: O"B3>uBV5!3#K*1k>uBVA+0\

M-8B>uBV5!3# M-8B>uBV5!3#K*1kF~=PNO$O!"6&$K0,1 $NN%;6CM$G$"$k!#$=
7F!"$=$N>uBVA+0\$O!"Nc$ ($P?^2.1.1 Nh$&$KJk!#$3$3$G!"2#<4$O;~9o!"1|
8~$-$N<4$H=D<4$KhC$F2<!85$N>uBV6u4V$rI=$7$F$$k!#

M-8B>uBV5!3#GO!">uBV$N<h$jF@kCMO0,1 $NN%;6CM$G$"$k!#$=$N$?$a!">u
BV6u4VK*$$FHk>uBV$O!":BI8$r(1|8~$-$N<4$NCM,=D<4$NCM) H7$FI=8=$9
kH!"(0,0),(0,1),(1,0),(1,1) $N4>uBV$G$"$k!#

$=$7$F!";~4V$bN%;6E*$K07$olF$$k$?$a!";~9o$,0,1,$\cdots$ $H?J$`Kh$K!"@h$N
4 DN>uBVN&A$N1 DKA+0\$9k3HKJk!#?^NNcG$O!"GrH4$-$N4]$,3F
;~9o$N>uBV$N0LCVH9kH!";~9o0 $G(0,0)!";~9o1 $G(0,1)!";~9o2 $G(1,1)!";~
9o3 $G(1,0) Nh$&$KA+0\$7$F$$k!#

O"B3>uBV5!3# 3l$KBP$7!"O"B3>uBV5!3#K*$$F$O!"F~=PNO$OM-8B>uBV5!
3#$HF1MM$K0,1 $NN%;6CM$G$"$k,!">uBV$OO"B3CM$G$"$k!#$=$7F=$N>uBVA+0\
$O!"Nc$ ($P?^2.1.1 Nh$&$KJk!#$3$3$G!"3F<4$O?^2.1.1 $N>l9g$HF1$8$G$"$k!#

O"B3>uBV5!3#GO!">uBV$N<h$jF@kCMO[0,1] $NHOO0$NO"B3CMG"kN$G!">u
BV6u4VK*$$FHk>uBV$O!"@h$HF1MM$K:BI8$r(1|8~$-$N<4$NCM,=D<4$NCM) $H
7FI=8=9k$H!"(0,0) $+$i(1,1) $^$G$NHs2D;;L58B8D$N>uBV$,B8:_$9$k!#

$?$@$7!"O"B3>uBV5!3#$K$*$1$k;~4V$OM-8B>uBV5!3#$N;~$HF1MM!"N%;6E*$K
07ol$F$$k$?$a!";~9o$,0,1,···$H?J$'Kh$K!"O"B3>uBV5!3#NH$k>uBV$O@h
$NHs2D;;L58B8D$N$&$A$N1 DKA+0\$9k3HKJk!#

0J>er^HakH!"<!Nh$&$KJk!#

1. M-8B>uBV5!3#

   F~=PNO!&uBV: N%;6CM

   ;~4V: N%;6

2. O"B3>uBV5!3#

   F~=PNO: N%;6CM

   >uBV: O"B3CM(<B?t)

   ;~4V: N%;6

O"B3>uBV5!3#$NG=NO O"B3>uBV5!3#$OO"B3E*$J>uBV6u4V$H7F!"M-M}?t$@$1$G
J/L5M}?t$b4^$'<B?t$r07$($k!#0lJ}!"%A%e!<%j%s%05!3#$OM-M}?t$^G7$+
07$&$3H,G-$J$$!#7?$,$C$F!"O"B3>uBV5!3#$O%A%e!<%j%s%05!3#hj$b
G=NO$,9b$/!"G$0U$N8@8l$,7W;;2DG=$G$"$k([4][5][6])!#3Nh&$JO"B3>uBV5!
3#$N5!3#%/%i%9$K$*$1$k0lCVIU$1$O?^3 Nh$&$KJk!#

?^3: O"B3>uBV5!3#$N5!3#%/%i%9$K$*$1$k0lCVIU$1

2.1.2 %j%+%l%s%H%M%C%H

A0@aNh$&$JO"B3>uBV5!3#$O!"0lHL$K%j%+%l%s%H%M%C%HKhCF9=@.5l
$k!#$=3G0J2<GO!"$^$:$O%j%+%l%s%H%M%C%H$N9=@.MWAGG"$k%K%e!<%m%s!&
%b%G%kKD$$$F@bL@9k!#%j%+%l%s%H%M%C%H$GMQ$$$ilk%K%e!<%m%s!&b%G

%k $b!"M-L>$J3,AX7?%K%e!<%i%k%M%C%HK*$$$F8m:95UEAHBK!$rMQ$$$k>l9g$HF1MM$K!"=\@~7AAG;R%b%G%k$H8F$PlkbNG"$k([7] [8]) !#B3$$$F!"$=$N=\@~7AAG;R%b%G%k$rMQ$$$F9=@.5l$k%j%+%l%s%H%M%C%H$K$D$$$F@bL@9k!#%j%+%l%s%H%M%C%H$O%U%#!<%I%P%C/!&k!<%W$rM-9k3HKh$j=g=x2sO)$HF1MM$K;~7ONs=hM}$,9T$($k!#$=$7$F!"$5iKO"B3CM$r07$(k3H+$i!"%j%+%l%s%H%M%C%H$O O"B3>uBV5!3#$r9=@.$G$-$k3HKD$$F=RYk!#

%K%e!<%m%s!&b%G%k %j%+%l%s%H%M%C%HK*$$$F0lHLKh$/MQ$$$ilk%K%e!<%m%s!&b%G%k$,!"=\@~7AAG;R%b%G%k(?^4)$G$"$k!#

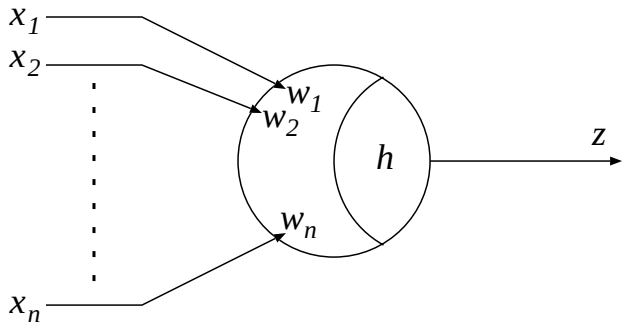

?^4: %K%e!<%m%s!&b%G%k

3N%b%G%kGO0lDN%K%e!<%m%sOn8D$N%K%e!<%m%s$+i=l>lx_1, x_2, \cdots, x_n$$N6/5NF~NO?.9f$r<u$1Hj!"$=$NFbIt>uBVu$*$h$S=PNOz$O

$$u = \sum_{i=1}^{n} w_i x_i \quad (1)$$

$$z = f[u-h] \quad (2)$$

$GI=$5lk!#

$3$3GhOogCMG"$j!"w_i$Oi HVL\$N%K%e!<%m%sHN4V$N7k9g8zN($rI=$9NL$G7k9g2Y=E$H8F$Plk!#

%K%e!<%m%s$NI>2A4X?t f$O!"0lHL$KHyJ,2DG=$JC1D4A}2C4X?t$*$h$SC1D4Hs8:>/4X?t$,MQ$$$ilk!#3l$O!"%K%e!<%i%k%M%C%H$K3X=,5;$k:]$K!"8m:95UEAHBK!Nh$&&J:G5^9_2<K!$K4pE/3X=,%"%k%4%j:\$rMQ$$$k>l9g!"7k9g2Y=E$NJQNL$r5aak:]$KHyJ,$5lk$+$iG"$k!#0lHL$K$O!"

$$f[u-h] = \frac{1}{1+exp(-(u-h))} \quad (3)$$

Nh$&$J%7%0%b%$%I4X?t$,MQ$$$i$l!"%K%e!<%m%s$NF~=PNOO(0,1)$NHO0O$NO"
B3CMrH$k!#

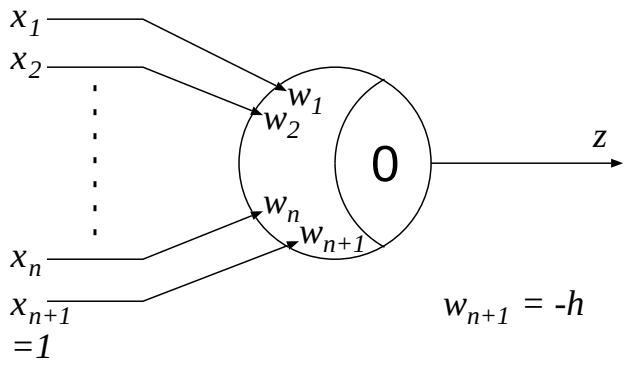

?^5: ogCM$r7k9g2Y=E$K4^a?%K%e!<%m%s!&b%G%k

H3mG!"?t<0$N<h07$$$N4JC12=N?aK!"bgCMhNBeoj$K!"2>A[E*$K>o$K
1$rM?$($kn + 1HVL\$NF~NOx_{n+1}$r@_$1$F!"?7$?$Kn + 1HVL\$N7k9g2Y=Ew_{n+1}
$r−h$HDj5A9l$P!"<0(1)$H(2)$GDj5A$5lkF~=PNO4X78$O!"<!<0$Nh&$K4J
7i$KI=$5lk!#

$$u - h = \sum_{i=1}^{n} w_i x_i + w_{n+1} = \sum_{i=1}^{n+1} w_i x_i, \quad w_{n+1} = -h \tag{4}$$

$$z = f\left(\sum_{i=1}^{n+1} w_i x_i\right) \tag{5}$$

3NI=8=<0$KBP1~$9$k%K%e!<%m%s!&b%G%k$O!"?^5Nh$&$KJk!#3Nw_{n+1}
$O%P%$%"%9(bias)$H8F$Plk!#$^$?!"$=$l$^$GogCMH7F$$$?H3mOHJ$C
$F$$k!#0J>eNh$&$K9k3H$G!"ogCM$N3X=,$b!"7k9g2Y=E$N>l9g$HF1MM$K9T
$&$3H,G-$k!#0J9_!"$3$NI=8=<0$GI=5l$k%K%e!<%m%s!&b%G%k$rMQ$$$k!#

%j%+%l%s%H%M%C%H %j%+%l%s%H%M%C%HHO!"%U%#!<%I%P%C%/!&k!<%W$r;}$D
%K%e!<%i%k%M%C%HN3HG$"$k!#Nc$($P?^6$O!"%K%e!<%m%s?t38D$N%j%+%l%s
%H%M%C%H$rI=$7F$$k!#?^6$N;M3Q$O30ItF~NO$r!"4]$HFs=E4]$O%K%e!<%m%s$r
I=$7F$$k!#38D$N%K%e!<%m%s$NFb$N1$D(?^6$NFs=E4])$,30It=PNOHJCF
$$k!#

%j%+%l%s%H%M%C%H$N%U%#!<%I%P%C%/!&k!<%W$O!"=g=x2sO)$N%U%#!<%I%P%C
%/!&k!<%W$HF1MM$K!"F~NO$NMzNr$r$=$N>uBV$H7$FBeI=5;k3H,G-$k!#

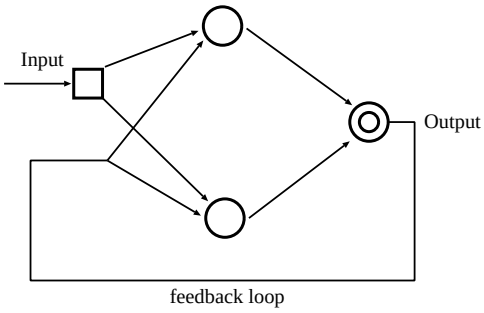

?^6: %j%+%l%s%H%M%C%H$NNc

3l$KBP$7!"DL>o$N%K%e!<%i%k%M%C%H$O!"=PNO$,$=$N;~$NF~NO$+$i0l0U$K7h$^k3H+$i!"AH$_9go;2sO)E*$KF0:n$9$k!"$H8@$($k!#7?$,$C$F%j%+%l%s%H%M%C%H$O!"DL>oNAH_9go;2sO)E*$J%K%e!<%i%k%M%C%H$H$OO[$J$j!"=g=x2sO)$HF1MM$N;~7ONs=hM}$r9T$&$3H,G-$k!#

6qBNE*K=N3Hr<(9?aK!"0J2<%j%+%l%s%H%M%C%H$,=g=x2sO)$rLOJoG-kNcK$D$$F=RYk!#NcH7$F!"F~NO7ONs$N%Q%j%F%#(XOR)$r5a$a$k=g=x2sO)(?^7)$r9M$($k!#

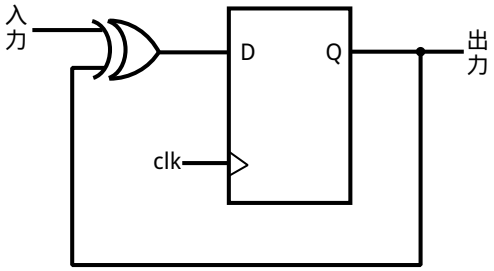

?^7: F~NO7ONs$N%Q%j%F%#$r5aak=g=x2sO)

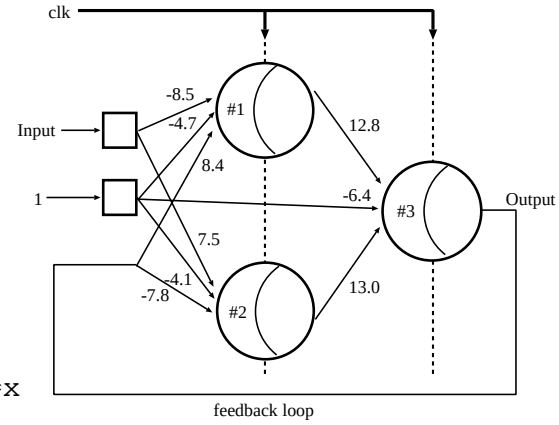

?^8: F~NO7ONs$N%Q%j%F%#$r5aak%j%+%l%s%H%M%C%H

3l$KBP$7!"?^8Nh$&$J7k9g2Y=E$r;}$D%j%+%l%s%H%M%C%HJi$P!"?^7$HF1MM$KF~NO7ONs$N%Q%j%F%#(XOR)$r5a$a$k=hM}$r9T$($k!#$3$3$G!"?^8$N;M3Q$O30ItF~NO$rI=7F$$k!#2DN30ItF~NON&A$N1$D$O>o$K1$,M?$(il$k!"%P%%"%9MQ$NF~NOG"$k!#

$^$?!"?^8$N4]$O%K%e!<%m%s$rI=$7$F$$k!#1!A#3$O%K%e!<%m%s$N%$%s%G%C

%/%9 G"$k!#%K%e!<%m%s$NI>2A4X?t$f O3$3GO%7%0%b%$%I4X?t $H$7!"A0=R $N<0(3) $GM?$(BilkH2>Dj9k!#

3 DN%K%e!<%m%sN&AN1 $D(#3) $O30It=PNO$HJC$F$$$k!#$=$N30It=PNO $+$i$O!"%U%#!<%I%P%C%/!&k!<%W$,#1 $H#2 $N%K%e!<%m%s$=l>lNF~NO$H JC$F$$$k!#

$^$?!"30ItF~NO$H%K%e!<%m%s!"$*hS!"%K%e!<%m%sF1;N$r7k9g$9$k3FLp0u$O!" 8~$-$O?.9f$,EAHB$9$k8~$-$r!"$=3KIU5l$??tCM$O7k9g2Y=E$rI=$7$F$$$k!# $?$@$7!">o$K1 $,M?$(Bil$k30ItF~NO$+$i3F%K%e!<%m%s$X$NLp0u$KIU5l$??t CM$O%P%$%"%9$G$"$k!#

6qBNE*$K?^7 $N=g=x2sO) $H?^8 $N%j%+%l%s%H%M%C%H $NF0:n$rHf3S7F$_$k!# F~NO$N7CNs$NNcH7$F!"1 $,:G=i$KF~$j!"0 $,$=$N<!$KMhkH9k!#

?^7 K*$$$F!"$^$:XOR $NF~NO$,30ItF~NOB&$N1 $H%U%#!<%I%P%C%/!&k!<%W B&$N0 JN$G!"XOR $N=PNO$O1 HJ$k!#$=3G%/%m%C%/(?^$Nclk) $,F~$k3H KhCFD %U%j%C%W!&U%m%C%WK3$N1 $,C_$(Bil$k!#D %U%j%C%W!&U%m%C%W $N=PNO1 $,%U%#!<%I%P%C%/!&k!<%W$rEAok$H!"<!$NXOR $N30ItF~NO$H7F0 $,F~$CF-$F$$$kNG!"XOR $N=PNO$O1 HJ$k!#$=$N8e!"$^$?%/%m%C%/$,F~$k 3HKhCFD %U%j%C%W!&U%m%C%WK3$N1 $,C_$(Bil$k!#

0lJ}!"?^8 K*$$$F!"$^$:30ItF~NO(?^$NInput) $N1 $H%P%$%"%9MQF~NO$N1!" $=$7$F%U%#!<%I%P%C%/!&k!<%W$+iNF~NO$N=i4 |CM$G$"$k0 $,!"$=l>$l:G=i$N %K%e!<%m%s2 DKEAHB$7!"@h$K=RY?%K%e!<%m%s$NI>2A4X?t$N<0(3) $K4p$$$F =PNO$,7W;;$5lk!#3Nh&$KLp0uJ}8~$X$N?.9f$NEAHB$K4p$$$?3F%K%e!<%m%s $N=PNO$N7W;;$r9T$&3H$r!"0lHL$KForward Propagation $H8F$V(0J9_!"FP H9$k)!#$3$3$G$O#1 $N%K%e!<%m%s$NFbIt>uBV$u $O

$$
\begin{aligned}
u &= \sum_{i=1}^{n+1} w_i x_i \\
&= -8.5 \times 1 + 8.4 \times 0 + -4.7 \times 1 \\
&= -13.2
\end{aligned}
$$

G"k+$i!"#1 $N=PNOz $O

$$
\begin{aligned}
z &= f[u] \\
&= \frac{1}{1 + exp(-(u))}
\end{aligned}
$$

$$= \frac{1}{1 + exp(-(-13.2))}$$
$$= 1.9 \times 10^{-6}$$

$H$$&0 $K6a$$CMHJ$k!#F1MM$K!"#2 $N=PNO$O0.97 $H$$&1 $K6a$$CMHJ$k!#$3li$H%P%$%"%9MQ$NF~NO1 $,<!$N%K%e!<%m%s#3 $KEAHB$7$F!"F1MM$K=PNO$,7W;;$5$l!"0.99 $H$$&1 $K6a$$CM$,=P$k!#3N$*$h$=1 $H$$&=PNOCM$,%U%#!<%I%P%C%/!&k!<%W$rEAHB$7!"<!$N30ItF~NO0 H"o;$F=PNO$N7W;;$,F1MM$K9Tol!"=PNOH7$F0.99 $H$$&1 $K6a$$CM$,=P$k!#

3N;~!"?^8 $Nclk $,;X$9F1$8E@@~$N>eK"$k%K%e!<%m%s$r!"%j%+%l%s%H%M%C%HK*1kF10lNCJH$_$J$7!"$=l>lNCJK*$$FF14|$,$Hil$k!#0J2<!"$3$N0l$DNCJK$*$$FFP $,12s9T$olk;~4V$r1;~9o$H9k!#

Nc$($P!"#1 $H#2 $rF10l$NCJH7$F7W;;$NF14|$,$Hil$k!#$D$^$j!"F10l;~9oK*$$F#1 $H#2 $NFP $,$J5l$k!#$=7F<!$N;~9o$K$=$N7k2L$,#3 $N%K%e!<%m%s$KEAHB5l!"$=$N0LCV$r0l$DNCJH7FF14|$,$Hil!"7W;;$,$J5l$k!#$5iK<!$N;~9o$K$*$$F!"#3 $+$i%U%#!<%I%P%C%/5l$?CM$H<!$N30ItF~NO$H$N7W;;$r!":F$S#1 $H#2 $rF10l$NCJH7$F9T$&$?$a$NF14|$,Hilk!#

7?$,$C$F!"?^7 $N=g=x2sO) $Nclk $HF1MM$K!"?^8 $Nclk Nh$&$J2>A[E*$J%/%m%C%/$,B8:_9k!#

0J>eNh$&$K!"%j%+%l%s%H%M%C%H $O!"=g=x2sO) $HF1MM$K;~7ONs=hM}$,9T$($k!#$5iK!"?^8 Nh$&$J%j%+%l%s%H%M%C%H $O!"2.1.1 @a$G=RY?h&$KF~=PNO$*hS>uBV$KO"B3CM$r07$($k3H$+$i!"O"B3>uBV5!3#$r<B8=$9k3H,G-$k!"$H8@$($k!#

2.1.3 4XO"8&5f

2.1.1 @aK*$$F=RY?h&$K!"O"B3>uBV5!3#$O%A%e!<%j%s%05!3#hj$bG=NO$,9b$/K|G=$G$"$k!#$=$7$F!"$3Nh$&$JO"B3>uBV5!3#$O0lHL$K%j%+%l%s%H%M%C%HKhCF9=@.5lk3Hb=RY?!#7?$,$C$F!"O"B3>uBV5!3#$H%j%+%l%s%H%M%C%H$OF1$8G=NO$r;}$D3H$,9M$(il$k!#$=7F!"<B:]K=lrZL@9k%j%+%l%s%H%M%C%H$NG=NO$K$D$$F$N8&5f$,Hava iKhCFJ5l$F$$$k!#

$=$3$G0J2<$G$O!"^$:<!@a$GHava iN8&5f$r>R2p9k!#Hava iO!"%j%+%l%s%H%M%C%H$N7k9g2Y=E$N7?$,!"@0?t!"M-M}?t!"<B?t$N>19g$K!"$=l>lKBP

1~9k8@8l$N%/%i%9$r5aak8&5f$r9T$C$?([9] [10]) !#$=$N7k2L$K$D$$F35@b9k!#

B3$$F!"3Nh&$J9b$$G=NO$r; }$D%j%+%l%s%H%M%C%H$r1~MQ$9$k8&5f$NNcH7F!"McClleland iN8&5f$r>R2p$9$k!#

%j%+%l%s%H%M%C%H$NG=NO %j%+%l%s%H%M%C%H$N7W; ;M}O@H7F!"%A%e!<%j%s05!3#HN7W; ;G=NO$NBP1~$,B?$/8&5f$5lF$$k!#$3$3GO!"N%; 6; ~4V!"O"B3>uBV$N%j%+%l%s%H%M%C%H!&b%G%k$K$D$$F!"$=$N7k9g2Y=E$K@)Ls$rM?$($?>l9g$N%j%+%l%s%H%M%C%H$N7W; ;G=NO$K4X$9$kHava iN7k2L$r>R2p9k!#

$3$3$G07$&%j%+%l%s%H%M%C%H$NDj5A$O!"

$$x_i(t+1) = \sigma\left(\sum_{j=1}^{N} a_{ij}x_j(t) + \sum_{j=1}^{M} b_{ij}u_j(t) + c_i\right) \quad , \quad i = 1, \cdots, N$$

$$\sigma(x) = \begin{cases} 0 & x < 0 \\ x & 0 \leq x \leq 1 \\ 1 & x > 1 \end{cases}$$

G"$k!#

$3$3$G!"4X?t$\sigma$$O%K%e!<%m%s$NI>2A4X?t$G$"$j!":G$bC1=c$K<B8=G-$k%7%0%b%$%I4X?tG"$kK0OB@~7A4X?t$rMQ$$$F$$k!#$i HVL\$N%K%e!<%m%sNx_i(t)$O; ~9o$tGNJ?6QH/2PIQEY!"NO%K%e!<%m%s$N?t!"$u_j(t)$O30ItF~NO!"$M$O30ItF~NO$N8D?t!"a_{ij}, b_{ij}O7k9g2Y=E!"c_iOogCM$rI=$9!#

3N%j%+%l%s%H%M%C%HKD$$F!"8@8l$L \subseteq \{0,1\}^+$N7hDjLdBj$r%M%C%H%o!<%/$GDj5A$77W; ;O@E*; kE@$rF3F~9k!#8@8l$L \subseteq \{0,1\}^+$N7hDjLdBjHO!"F~NO5l$kJ8; zNs$\omega \in \{0,1\}^+$,8@8l$K4^$^$lk+H]$+$r7hDj9kLdBjG"$k!#

%M%C%H%o!<%/XNF~NO$ru(t) \equiv (D(t), V(t)) \in \{0,1\} \times \{0,1\}$H$7!"%M%C%H%o!<%/CfN2DN%K%e!<%m%s$x_{o1}(t), x_{o2}(t)$rMQ$$$F!"$=$N=PNO$r(O_d(t), O_v(t)) \equiv (x_{o1}(t), x_{o2}(t))H9$k!#$3$3$G!"D(t)$OF~NO%G!<%?$r7!"D(t)$K%G!<%?,F~NO$5lF$$k3H$rV(t) = 1$GI=$9!#=PNO$K$D$$F$bF1MM$KO_v(t) = 1$G!"O_d(t)$K%G!<%?,=PNO5l$F$$k3H$rI=$9!#

3NF~NOu(t)$rMQ$$$FJ8; zNs$\omega = \alpha_1\alpha_2\cdots\alpha_n$r

$$D(t) = \begin{cases} \alpha_t & t = 1, 2, \cdots, n \text{ \$N\$H\$-} \\ 0 & \text{\$=\$NB>} \end{cases}$$

$$V(t) = \begin{cases} 1 & t = 1, 2, \cdots, n \\ 0 & \end{cases}$$

H7$F%M%C%H%o!<%/$KF~NO9k!#%M%C%H%o!<%/K*1k7W;;$O!"3F%K%e!<%m%s $N=i4|CM$r$x_i(1) = 0$H7F9T$&!#

$3$3$G!"ogCM$c_iO\sigma(c_i) = 0HJkh$&$KA*$V!#7W;;7k2L$(B$\omega \in L$$+H]$+)$O!"
;~4VτG7W;;$,=*N;$9kH$-!"

$$O_d(t) = \begin{cases} \eta_\omega & t = \tau \\ 0 & \end{cases}$$

$$O_v(t) = \begin{cases} 1 & t = \tau \\ 0 & \end{cases}$$

H7$F=PNO$9$k!#$3$3$G!"η_ωO1$^$?$O0$G$"$j!"<uM}!&ls<uM}$rI=$9!#

3NF~=PNO$,Dj5A$5l?%M%C%H%o!<%/r3$3$G$O!"7A<0%M%C%H%o!<%/$H8F$V!#

$T : \mathbf{N} \to \mathbf{N}$$r<+A3?t>e$N4X?t$H9k!#8@8l$L \subseteq \{0,1\}^+$$K$D$$$F!"7A<0%M%C%H%o!<%/N,B8:_7F!"G$0U$N$\omega \in \{0,1\}^+$$K$D$$$F!";~4V$\tau \leq T(|\omega|)$$G7W;;$,=*N;$7!"$+$D$\omega \in L$$NH-$\eta_\omega = 1$,$=$&GJ$$$H$-$\eta_\omega = 0$$G$"$kH-!"8@8lLO!"7A<0%M%C%H%o!<%/NKhC$F;~4V$T$GG'<1$5lk$H8@&!#

5F!"3Nh&$KDj5A$7$?7A<0%M%C%H%o!<%/$K$D$$$F!"<!N3H,<(5l$F$$$k!#

(1) @0?t78?t$N7A<0%M%C%H%o!<%/$N_Z(7k9g2Y=E$,@0?t)$K$*$$$F3F%K%e!<%m%s$O!"$\{0,1\}$N2CM$rHj!"N_Z,7W;;2DG=$J8@8l$N%/%i%9$O@55,8@8l$KBP1~9k!#

(2) M-M}?t78?t$N7A<0%M%C%H%o!<%/$N_Q$N7W;;G=NO$O%A%e!<%j%s%05!3#KEy7$$!#3l$O!"7W;;~4V$K$D$$$F$bF1MM$KEy7/!"%A%e!<%j%s%05!3#MG;~4VTG7W;;5l$k4X?t$r;~4VTG7W;;9kN_Qr9=@.G-!"N_QN%5%$%:$O;~4VTK0MB8$7$J$$!#$=$7$F!"K|G=%A%e!<%j%s%05!3#$KBP1~9kM-8B8D$N%K%e!<%m%s$+iJ$kM-M}?t78?t$N7A<0%M%C%H%o!<%/$,B8:_$9$k!#

(3) <B?t78?t$N7A<0%M%C%H%o!<%/$N_R$O<B?t$rL58B$N@:EY$G;XDjG-kH$$$&0UL#$G%A%e!<%j%s%05!3#$rD6$($k7W;;G=NO$r;}$D!#3NH-7W;;2DG=$J8@8l$N%/%i%9$O!"7W;;~4V$r@)8B7J1lPG0U$N8@8l$,7W;;2DG=G"$k!#

0lJ}$G!"<B83E*$K$O!"%j%+%l%s%H%M%C%H$O>uBV5!3#hjG=NO$,9b$/!"J8L.<+M3J8K!$K5Z$P$J$$^Gb!"$=$l$K6a$$8@8l%/%i%9$r=hM}$9k3H,G-k3H,J,$+$C$F$$k!#$=$3$G0J9_$G$O!"$=Nh$&$J%j%+%l%s%H%M%C%H$Nl~MQNc$H7F!"McClleland iN8&5f$r>R2p$9$k!#

1~MQNc 0J2<GO!"$^$:%j%+%l%s%H%M%C%H$Nl~MQ8&5f$K$*$$$F=>Mhh/MQ$$$ilF$-$?C1=c2s5"7k9g2sO)LVKD$$F=RYk!#B3$$$F!"$=$Nl~MQNcH7$F!"McClleland iN8&5fKD$$F@bL@9k!#

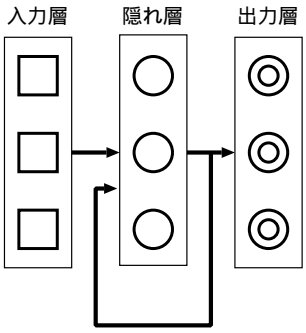

?^9: SRN

O"B3>uBV5!3#$r%j%+%l%s%H%M%C%H$G<B8=9k=>Mh$N8&5f$G$O!"Elman [11] KhCFDs0F5l$?!"?^9$Nh&$JC1=c2s5"7k9g2sO)LV(Simple Recurrent Network, 0J2<%7%s%W%k%j%+%l%s%H%M%C%HH9$k) $,%j%+%l%s%H%M%C%H$N%b%G%kH7$F0lHL$KMQ$$$ilk!#

%7%s%W%k%j%+%l%s%H%M%C%H$O!"F~NOAX!"1#$lAX!"=PNOAXKh$k0lHLE*$J3AX%b%G%k$K!"1#$lAX$+$i1#lAXX$N%U%#!<%I%P%C%/!&k!<%W$r2C$($?bNG"$k!#0lHLE*$J3AX%b%G%k$HF1MM$K!"NY@\$9$kAX4V$N%K%e!<%m%s$O7k9g$7$F$$k$,!"AXFb$N7k9g$OB8:_$7$J$$!#?^9$NLp0u$O!"$=$N7k9g$H!"?.9f$NEAHB9kJ}8~$r<($7$F$$k!#

McClelland iO!"Reber J8K!(?^10) $H8F$PlkC1=c$JM-8B>uBV5!3#$Khj@8@.5l$?%k%U%!%Y%C%HNs$r<uM}9k>uBV5!3#$r%7%s%W%k%j%+%l%s%H%M%C%H$K3X=,$5$;$k8&5f$r9T$C$?[3]!#$3$3$G!"3NReber J8K!$r!¥uM}$9$k!W$H$O!"M?$(il$?%k%U%!%Y%C%HNs$N9YFNJ8;z$,!"J8K!$N:G8e$NJ8;zE$K$$$?k^$GJ8K!$K$+$JCF$$k3H$r8@&!#

0J2<GO!":G=i$K!"%7%s%W%k%j%+%l%s%H$,F0:n$H>uBVI=8=$NN>J}$K

$*$$$F M-8B>uBV5!3# r&$^$/LOJo9kh&3X=,G-k3Hr<($9!#<!$K!"%7%s%W%k%j%+%l%s%H%M%C%H Ji$P!"M-8B>uBV5!3# KO$J$$@-<AG"$j!"$+$DO" B3>uBV5!3# KO$"$k@-<AH7$F!"%"%k%U%!%Y%C%HNs$NA0$NItJ,$N7CNs$r8e$GI, MWKJk^$GJ];}G-$k3H$r<($9!#

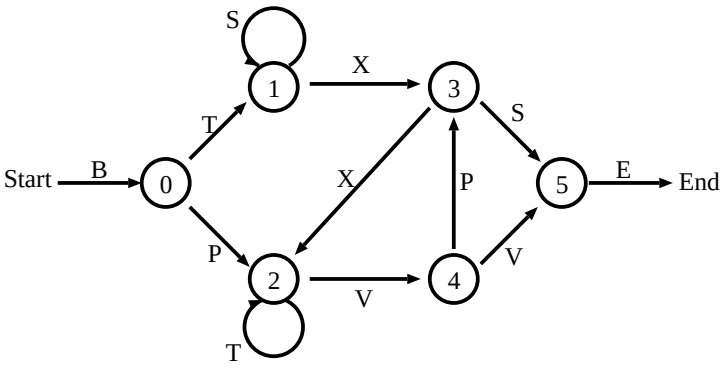

?^10: Reber J8K!

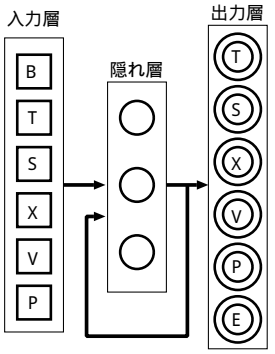

?^11: %7%s%W%k%j%+%l %s%H%M%C%H$N9=@.

<B83$KMQ$$$?%7%s%W%k%j%+%l%s%H%M%C%H $O?^11 Nh$&$J9=@.r7F$$k!#F~NOAXKO6<dN'$NJ8;z(B,T,S,X,V,P) $=$l$>$l$KBP1~$9$k%K%e!<%m%s$r6 8D!"=PNOAXKO6<dN'$NJ8;z(T,S,X,V,P,E) $=$l$>$l$KBP1~$9$k%K%e!<%m%s$r6 8D!"$=$7$F1#$lAXKO%K%e!<%m%s$r3 8DMQ$$$?!#

3!A30 J8;z$+$iJk!"B $+$i;O$^$j?^10 $NJ8K!$K=>$&!"%i%s%@%'$K@8@.5l$?60,000 %Q%?!<%s$NJ8;zNs$rF~NO$H$7!"BP Kh$k3X=,$r9TC?!#J8K!$K=>$&;~!"<!$NF~NO$H7F<h$jF@$kJ8;z$r65;U?.9f$H7FMQ$$$k!#Nc$($P!"8=:_B $H$$$&F~NO$,M?$(il$F$$$kJi$P!"=PNO$H7FT $HP $,H/2P$9kh$&$K3X=,5;$k!#

3N3X=,8e$N%M%C%H%o!<%/$K!"?^10 $NJ8K!$K=>$&!"%i%s%@%'$K@8@.5l$?20,000 %Q%?!<%s$NJ8;zNs$rF~NO$H7F2C$($?!#3FJ8;zNs$N:G8e$NJ8;z$,F~NO$5l?7k2L!"E $KBP1~$9$k%K%e!<%m%s$,H/2P9l$P!"$=$N7CNs$O<uM}5l$?$bNH$_$J9H9k$H!"$3liA4FN7CNs$r<uM}$9k3H,3NG'5l$?!#

3Nh&$K!"M-8B>uBV5!3# $rHs>o$Kh/LOJoG-kh$& %7%s%W%k%j%+%l%s%H%M%C%H $r71N}$9k3H,G-$?!#$3$N;~!"%7%s%W%k%j%+%l%s%H%M%C%H $N1#$lAX$N%Q%?!<%s$H7FReber J8K!$N3F>uBV$KAjEv9k%/%i%9%?$,7A@.$5lF$$$k3H$,$+C?!#

7+$7!"$3$NReber J8K!$r3MF@7?%7%s%W%k%j%+%l%s%H%M%C%H$NFbItI=8=$r;R:Y$K8+$F$_$k$H!"M-8B>uBV5!3#$H$O0[$JGF$$k3H$,J,$+$k!#<B:]!"$3$N%7%s%W%k%j%+%l%s%H%M%C%H$r4^$a!"%j%+%l%s%H%M%C%H$O0"B3CM$rMQ$$F$$$k$?$a!"K\<AE*$KM-8B>uBV5!3#$H$O0[$J$k!#$3N3H+$i!"$3Nh$&$JO"B3CM$N>uBV>pJs$rMxMQ9k3H$,$G$-$k>uBV5!3#$r O"B3>uBV5!3#$H8FV3Hr McClleland iOds>'7?!#

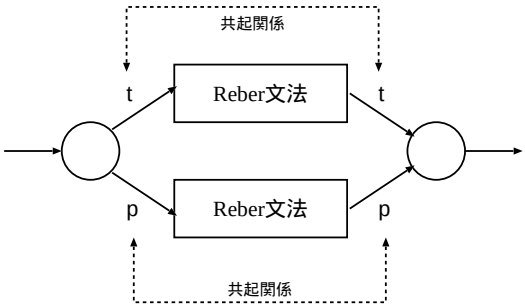

?^12: Kd$a9~$_9=B$$r;}$DJ8K!$NNc

5i$K!"H`$i$O!"?^12$K<(9h$&$JF10l$NItJ,$,J#?tKd$a9~$^l?9=B$$r;}$DJ8K!$r%7%s%W%k%j%+%l%s%H%M%C%H$K3X=,$5$;$k<B83$r9T$G$?[12]!#<B83$N7k2L!"%7%s%W%k%j%+%l%s%H%M%C%H$O!"Kd$a9~$_ItJ,$,D9$$JIN$$/D+$N>l9g$r=|$$F!"$[$\@5$7$$$M=B,$r9T$&h&$K71N}$5$;$k3H$,$G$-$?!#

$=$N:]%7%s%W%k%j%+%l%s%H%M%C%H$NFbIt$G$O!"$=$NF10lItJ,Fb$NF1$80LCV$K$"$k>uBV$r!"A4$/JL$N>uBV$H7FI=8=7F$$ko1GO$J$$!#$=$liN>uBV$O!"$[$\F1$8FbItI=8=rH$k!#$D$^$j:G=i$N%"%k%!%Y%C%H$N0c$$$r!">uBVI=8=$N6O$+$J:90[$H7FJ];}7F$$k!#$=$&9k3H$G!"D9;~4V$Ko?$kF~=PNO$N0MB84X78$r=hM}$9k3H,G-$F$$kNG$"$k!#

3Nh&$JDI>oD9;~4V$Ko?$kF~=PNO$N0MB84X78$r=hM}$9k?aK$O!"M-8B>uBV5!3#$JiP?^12Nh$&$JKd$a9~$^l?F10l$NItJ,$K4X7F!"3:Ev9kItJ,$N>uBV$N%3%T!<$r;}$?6k$rF@$J$$!#bG$H8zN(NI$/07$&$NG"lP!"%W%C%7%e!&@%&%s!&*!<%H%^%H%s$rMQ$$$k3H$G!"Kd$a9~$_ItJ,$O%5%V%k!<%A%s8F=P7Nh&$K=hM}$9k3H,G-$k!#$3lKBP$7!"%7%s%W%k%j%+%l%s%H%M%C%H$O%3%T!<$r;}D3HJ$/!"%5%V%k!<%A%s8F=P$7$r9T$&3HbJ$/!"?^12$Nh&JKda9~$_J8$r3X=,9k3H$,$G$-$F$$k!#

0J>eNh$&$K!" %j%+%l%s%H%M%C%H $N:G$b4JC1JNcN0lDG$"$k%7%s%W%k%j%+%l%s%H%M%C%H $OM-8B>uBV5!3#$hjbG=NO$,9b$/!" J8L.<+M3J8K!KO5ZPJ$$^Gb!"$=$l$K6a$$/%i%9$r=hM}$9k3H,$G-$k3H$,McClleland iKhC$F<B83E*$K<(5l$?!#

2.2 %j%+%l%s%H%M%C%H$N3X=,

%j%+%l%s%H%M%C%H$N3X=,%"%k%4%j%:%`$K$OMM!9$J$b$N$,B8:_$9$k$,!"0lHL$K$O!"DL>o$N%K%e!<%i%k%M%C%H$K$*$1$k0lHLE*$J3X=,%"%k%4%j%:%`$G$"$k8m:95UEAGEK!(**Back Propagation**, 0J2<**BP** H9$k)$HF1MM!":G5^9_2<K!$K4p$E$$$?3X=,%"%k%4%j%:%`$,MQ$$$ilk!#

:G5^9_2<K!$K4p$E$/3X=,%"%k%4%j%:%` BP $O6I=j2r$K<}B+9k3H$OJ]>Z$5lF$$$k$,!"I,$:7b:GE,2r$K<}B+$9kLuGOJ$$!#7?$,$C$F!"M}O@E*$K$O3,AX7?%K%e!<%i%k%M%C%H$O3AX$"$lPG0U$NHs@~7?4X?t$r<B8=G-k3H,CNil$F$$$k$,([13][14])!"BP N?aK$O!"AX$rA}d7$?J}$,:GE,2r$K<}B+$70W$$>l9gb"kH8@ol$F$$$k!#7+$7!"$"$k%Q%?!<%s$r3X=,5;$k>l9g!"AX$r2?AX$K$7!"AX$N%K%e!<%m%s?t$r2?8DK9lP:GE,2r$K<}B+$70W$/$Jk+rCNk3H$O0lHL$K:FoG$"$k!#

%j%+%l%s%H%M%C%HK*1k:G5^9_2<K!$K4p$E$$$?3X=,%"%k%4%j%:%`$K$O!"MM!9$J$b$N$,B8:_$9$k!#%K%e!<%i%k%M%C%H$K$*$1$k BP F1MM!"%j%+%l%s%H%M%C%H$K$*$$F:G5^9_2<K!$K4p$E$$$?$3$l$i$N3X=,%"%k%4%j%:%`$rMQ$$$k>l9gKb!"F1MM$NLdBj$,$"$k!#3NLdBjKD$$$F$O!"3.2.2 @a$G=RYk!#

%j%+%l%s%H%M%C%H$N3X=,%"%k%4%j%:%`$O!"87L)$K:G5^9_2<K!$K4p$E$$$?$b$N$+$i6a;w$7$?$b$N$^$GMM!9$J$b$N$,B8:_$9$k!#87L)$K:G5^9_2<K!$K4p$E$/%"%k%4%j%:%`$K$O!"BeI=E*$JbNH7$F<B;~4V%j%+%l%s%H3X=,K!(Real Time Recurrent Learning)$,$"k,!"$=$N7W;;NLOO$(N^4)!"%a%b%jNL$OO(N^3)$GKDBg$G$"$k!#$=$N$?$a!"<!@a0J9_$G=R$Ykh$&$K!"6a;w$r9T$&3H$G7W;;NL$rO(N^2)!"$*$h$S%a%b%jNL$rO(N)$X8:$i7?[15]!"DL;~E*8m:95UEAGEK!(**Back Propagation Through Time**, 0J2<**BPTT** H9$k)[16]$,0lHL$KMQ$$$ilk!#

0J2<GO!"$^$:BPTT KD$$$F@bL@9k!#$=$3$G!"BPTT KO!"$=$NL\E*Kh$j2<oN`$N%"%k%4%j%:%`$,B8:_9k3H$r=RYk!#B3$$$F!"$=$N2<oN`$N%"%k%4%j%:%`G"$k!"%(%]%C%/KhDL;~E*8m:95UEAGEK!(**Epochwise BPTT**,

0J2<**EBPTT** H9$k)!"$*hS%j%"%k%?%$%'DL;~E*8m:95UEAGEK!(**Real-Time BPTT**, 0J2<**RTBPTT** H9$k)!"$K$D$$$F$=$l$>$l=RYk!#$=$7$F!"$5iK$=$liN3X=,%"%k%4%j%:%'$rMQ$$$Fhj3X=,$rMF0W$K9T$&$?aNJ}K!G"$k!"65;U6/@)(**teacher forcing**)KD$$$F@bL@9k!#

2.2.1 BPTT

0lHL$K%j%+%l%s%H%M%C%H$N3X=,KO!"@h$K=R$Y$?$h$&$KBPTT%"%k%4%j%:%'$,MQ$$$ilk!#BPTT $O!"%j%+%l%s%H%M%C%H$r;~4VE83+9k3H$G%U%#!<%I%P%C/!&k!<%W$r;}$?$J$$%K%e!<%i%k%M%C%H$KJQ49$7!"BP rE,MQ9$k<jK!$G$"$k!#

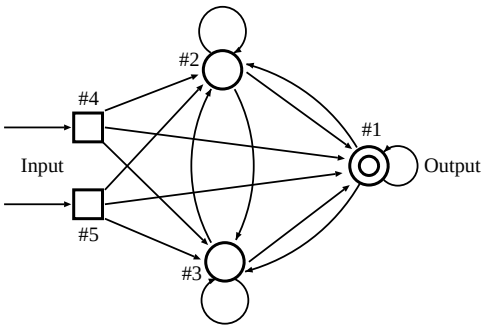

?^13: %j%+%l%s%H%M%C%H

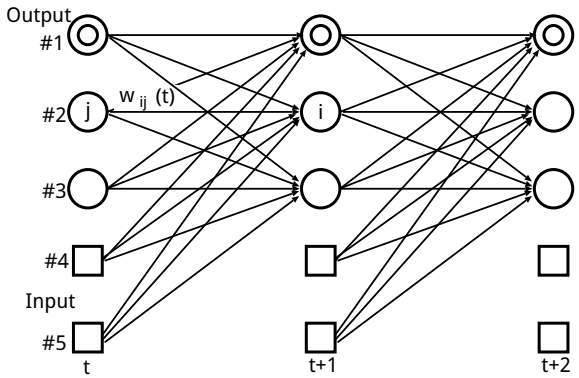

?^14: ;~4VE83+5l$?%j%+%l%s%H%M%C%H

?^13 $K%j%+%l%s%H%M%C%H$*hS?^14 K=lr;~4VE83+7?%K%e!<%i%k%M%C%H$r<($9!#?^$N28D$N;M3Q$O30ItF~NO$r!"38D$N4]$,%K%e!<%m%s$rI=$7F*$j!"$=N&$AFs=E4]$N%K%e!<%m%s$O30It=PNO$HJC$F$$$k!#?^14 K*1k3FAX$OF10l;~9o$N%K%e!<%m%sG"$j!"3F%K%e!<%m%s$*hS3F30ItF~NO$N%$%s%G%C%/%9(#1!A#5) $O?^13 NbNHBP1~$7F$$$k!#?^14 $K<($9h&$K!"%j%+%l%s%H%M%C%H$r;~4VE83+9k3H$G!"%U%#!<%I%P%C/!&k!<%W$r;}$?$J$$%K%e!<%i%k%M%C%H$rF@$k3H$,$G$-$k!#

3N;~F@il$k%K%e!<%i%k%M%C%H$O!"DL>o$N%K%e!<%i%k%M%C%H$HOd$d0[$JCF$$$k!#DL>o$N%K%e!<%i%k%M%C%H$O:G=i$NAX(F~NOAX)$KN_30ItF~NO$r;}$A!":G8e$NAX(=PNOAX)$KN_30It=PNO$r;}$D!#$=$l$KBP$7!"F@il$?%K%e!<%i%k%M%C%H$O3FAX$K30ItF~=PNO$r;}$D!#

3N$?$a!"DL>o$NBP r=N^$^E,MQ$9k3HOG-$J$$!#DL>o$NBP $O!"

=PNOAX$KF~NO?.9f$,EAGE7?;~E@K*1k=PNO?.9f$H65;U?.9f$H$NFs>h8m:9$r
:G>.2=9k%"%k%4%j%:%`G"$k!#0lJ}!"F@$il?%K%e!<%i%k%M%C%HKOA4FN
AX$K30ItF~=PNO$,B8:_9k$?$a!"BPTTK*1k:G>.2=9kBP>]$ODL>o$NBP
HO0[Jk!#

:G>.2=9kBP>]$N0c$$$Khj!"BPTTKO0J2<$N2$D$N%"%k%4%j%:%`$,Ds0F
5l$F$$$k!#

Epochwise BPTT(EBPTT) :G8eNAX^GN3F;~9oK*1k=PNO?.9f$H65
;U?.9fHNFs>h8m:9$NAmOB$r:G>.2=

Real-Time BPTT(RTBPTT) 8=;~9oK*1k=PNO?.9f$H65;U?.9f$H$NFs
>h8m:9$r:G>.2=

2DNBPTTK*1k:G>.2=9kBP>]$N0c$$$O!"$=$l$>$l$N3X=,MQES$K5/0x
9k!#

%m%\%C%H9)3XEyNJ,LnG$O!"3X=,$Ooff-line$Hon-line$N2DKBgJL5l$k!#
A0<T$O3X=,MQ$N;~7ONs%Q%?!<%s$rMQ0U$7!"$=$lKBP79T$&3X=,$G$"$k!#$=$l$K
BP$7!"8e<T$O3X=,9k%7%9%F%`$N2TF/(F~NO$KBP9k=hM})$HJB9T$7$F!"$=$N;~
7ONs%Q%?!<%sKBP79T$&3X=,$G$"$k!#

off-line 3X=,$r9T$&>l9g$O!"EvA3$GO"k,!"3X=,;~$K3X=,$9$k;~7ONs%Q%?!<
%s(0J9_!"%H%l!<%K%s0!&Q%?!<%s$H8F$V)$,L@$i$+$KJC$F$$$k!#0lJ}!"K\Mh
:G>.2=7?$$$BP>]$O%K%e!<%i%k%M%C%H$N=PNO7ONs$N%H%l!<%K%s0!&Q%?!<%s$K
BP9kFs>h8m:9G"$j!"$3lr5aak3H$O2DG=$G$"$k!#=>CF!"off-line 3X=,
KOEBPTT$,MQ$$$ilk!#

3l$KBP$7!"on-line 3X=,;~KO!"%H%l!<%K%s0!&Q%?!<%s$,L@$i$+$G$J$$!#
L@i+KJCF$$$kNO=PNO;~9o$^$G$N7ONs$N$_$G$"$j!":#8e$NF~NO7ONs$*$h
$S65;U7ONs$O=PNO;~E@GOL@i+GJ$$!#=>CF!">e=RNh$&$KK\Mh:G>.2=$7
$?$$$BP>]G"$k!"%H%l!<%K%s0!&Q%?!<%s$KBP9kFs>h8m:9$r5a$ak3H,$G
$-$J$$!#$=$3$G!"3F;~9o$K$*$$F$=$N;~9o$NFs>h8m:9$r:G>.2=9k3HKh$j
>-MhE*$J8m:9$r>.5/9kRTBPTT$,MQ$$$ilk!#

3l$iEBPTT$HRTBPTTN=l>lN%"%k%4%j%:%`KD$$$F!"<!@a0J9_
$G>\$7$/=R$Y$k!#

2.2.2 EBPTT

%j%+%l%s%H%M%C%H K*$$$F!"; ~9ot K*1k%f%K%C%H(30ItF~NO$^$?$O%K%e!<%m%s)i $N=PNO$rzi(t) H9$k!#$3$3$G!"; ~9ot K*1ki HVL\$N30ItF~NO$rxi(t), %K%e!<%m%s$N=PNO$ryi(t) H9lP!"zi(t) $O

$$z_i(t) = \begin{cases} x_i(t), & i \in I \text{ \$N\$H\$-} \\ y_i(t), & i \in H \cup O \text{ \$N\$H\$-} \end{cases} \tag{6}$$

G"$k!#$3$3$GI, H, O O=l>$l30ItF~NO!"30It=PNO0J30$N%K%e!<%m%s!"30It=PNO$N%K%e!<%m%s$N%$%s%G%C%/%9 $N=89g$rI=$9!#

3F%K%e!<%m%s$NF~=PNO4X78$O0J2<Nh$&$KI=$;$k!#

$$y_i(t+1) = f_i(s_i(t+1)), \quad i \in H \cup O \tag{7}$$

$$s_i(t+1) = \sum_{j \in I \cup H \cup O} w_{ij} z_j(t) \tag{8}$$

$3$3$G!"wij $O%K%e!<%m%sj $+$i%K%e!<%m%si XN7k9g2Y=E!"si(t+1) $O%K%e!<%m%si $NFbIt>uBV$rI=$9!#I>2A4X?t fi(x) $O!"2.1.2 @a$GA0=R7?h&$K!":G5^9_2<K!$K4pE/3X=,%"%k%4%j%:%\$rMQ$$$k>l9g$O7k9g2Y=E$NUQNL$r5a$a$k:]$KHyJ,5lk3H+$i!"HyJ,2DG=$JC1D4A}2C4X?t$,MQ$$$ilk!#0lHLKO

$$f(x) = \frac{1}{1 + \exp(-\beta x)} \tag{9}$$

$GI=$5lk!"%7%0%b%$%I4X?t$,MQ$$$ilk!#$3$3$Gβ $O4X?t$NUQ2=9k5^7c5rDjak@5$NDj?t$G$"$j!"β = 1.0 $H@_Dj$5lk3H$,B?$$[7]!#

%j%+%l%s%H%M%C%H KBP7$F!"; ~9ot0, t0 + 1, ···, t1 − 1 K*$$$F!"$=$l$>$lF~NOH7$F xi(t0), xi(t0 + 1), ···, xi(t1 − 1) $rM?$(!"$=$l$>$l$KBP1~$9$k65;U?.9f$H7F!"; ~9ot0 + 1, ···, t1 − 1, t1 K*$$$F!"di(t0 + 1), ···, di(t1 − 1), di(t1) $rM?$(kH9k!#

3NH-%M%C%H%o!<%/A4BN$N8m:94X?t$O!"3F; ~9oK*1k8m:9$NAmOB

$$J(t_0, t_1) = \sum_{\tau=t_0+1}^{t_1} E(\tau) = \frac{1}{2} \sum_{\tau=t_0+1}^{t_1} \sum_{i \in H \cup O} e_i(\tau)^2 \tag{10}$$

$GM?$(il$k!#

$?$@$7!"ei(t) $O

$$e_i(t) = \begin{cases} d_i(t) - y_i(t), & i \in O \text{ \$N\$H\$-} \\ 0, & \text{\$=\$NB>\$N\$H\$-} \end{cases}$$

G"$k!#

:G5^9_2<K!$K4p$E$$$F7k9g2Y=E$rJQ99$9k?aK$O!"7k9g2Y=E$NJQNIr\Delta w_{ij}$

H7$F

$$\Delta w_{ij}(t) = -\eta \frac{\partial J(t_0, t_1)}{\partial w_{ij}} \tag{11}$$

$K=>$G$F7k9g2Y=E$rJQ99$9$lPh$$!#η $O3X=,N($H8FPl$k!#

$3$3$G!";~4VE83+$5l?%j%+%l%s%H%M%C%H$N3FAX$N7k9g2Y=E$OFHN)$G$"$k$H8+$J$7!";~9o$\tau$ $N%K%e!<%m%s$j$+$i;~9o$\tau+1$ $N%K%e!<%m%s$i$ XN7k9g2Y=Erw_{ij}(\tau)$ $HI=$9!#3lKh$j!"$J(t_0, t_1)$ Nw_{ij} KBP9$k79$-$\partial J(t_0, t_1)/\partial w_{ij}$ $O!"0J2<$Nh&$KI=$;$k!#

$$\frac{\partial J(t_0, t_1)}{\partial w_{ij}} = \sum_{\tau=t_0}^{t_1-1} \frac{\partial J(t_0, t_1)}{\partial s_i(\tau+1)} \frac{\partial s_i(\tau+1)}{\partial w_{ij}(\tau)} \frac{\partial w_{ij}(\tau)}{\partial w_{ij}} \tag{12}$$

$3$3$G!"3F;~9o$\tau$ 4H$N7k9g2Y=E$w_{ij}(\tau)$ $O;~9o$\tau$ KC0MB8$7$J$$$Dj?t$w_{ij}(\tau) = w_{ij}$ G"kH2>Dj7F!"8m:94X?t$J(t_0, t_1)$ $r7k9g2Y=E$GJPHyJ,9l$P

$$\frac{\partial J(t_0, t_1)}{\partial w_{ij}} = \sum_{\tau=t_0}^{t_1-1} z_j(\tau) \frac{\partial J(t_0, t_1)}{\partial s_i(\tau+1)} \tag{13}$$

$H5a$ail$k!#

3N7k9g2Y=E$N2>Dj$K4pE/6a;wKh$j!"0J2<$N7W;;$r9T$&3H$G!"EBPTT$G$O%K%e!<%m%s?t$rNH7$?>l9g!"$=$N7W;;NL$O$O(N^4)$+iO(N^2)$X!"%a%b%jNL$O$O(N^3)$+iO(N)$X8:$i$9$3H,G-$k!#

<0(13)K*$$$F

$$\delta_i(\tau) = \frac{\partial J(t_0, t_1)}{\partial s_i(\tau)}, \quad t_0 + 1 \leq \tau \leq t_1$$

H*1P!"$J(t_0, t_1)$r6K>.2=9kh&$&J3X=,B'$O!"$\tau = t_1, t_0+1 \leq \tau \leq t_1 - 1$K0MB8$7$F

$$\delta_i(t_1) = (y_i(t_1) - d_i(t_1)) f'_i(s_i(t_1)) \tag{14}$$

$$\delta_i(\tau) = f'_i(s_i(\tau)) * \left[(y_i(\tau) - d_i(\tau)) + \sum_{l \in H \cup O} w_{li} \delta_l(\tau+1) \right] \tag{15}$$

$GM?$(il$k!#

7?$,$C$F<0(11) $+$i!"7k9g2Y=E$N99?7$O

$$\Delta w_{ij}(t) = -\eta \sum_{\tau=t_0}^{t_1-1} \delta_i(\tau+1) z_j(\tau) \tag{16}$$

$K=>$C$F9T$(Ph$$!#

$^$?!"7k9g2Y=E$N=i4|CM($3$1$r0J9_!"=i4|=E$_$H8F$V!#)$O!"0lHL$K>.$5$JMp?t$K@_Dj$5$1$k!#$3$1$O!"b7$9$YFN7k9g2Y=E$r!"Nc$($P0$Nh&$JF1$8CM$K@_Dj$7$F3X=,$r3+;O$9$1$P!"A0=R$7$?$h$&$K!"8m:9$O7k9g2Y=E$KHfNc7FEAHB$5$1kN$G!"$9YF$N7k9g2Y=E$OF1$8$h$&$KJQ2=7F7^$$!"HsBP>N$J2r$O7h7FF@i1$J$$$+iG$"$k!#

2.2.3 RTBPTT

K\@aGO!"RTBPTT $N%"%k%4%j%:%\$r!"A0@a$NEBPTT $H0[$J$kE@$K$D$$$F@bL@9k!#%j%+%l%s%H%M%C%HK*1k!";~9ot K*1k%f%K%C%H(30ItF~NO$^$?$O%K%e!<%m%s)i $N=PNOz_i(t) $O<0(6)!"3F%K%e!<%m%s$NF~=PNO4X78$O<0(7) $+$i<0(9) $GDj5A$5$1$kbN$H!"$=1>$lF1$8G"kH9k!#

RTBPTT GO!"%H%l!<%K%s0!%Q%?!<%sA4BN$NF~NO$H65;U?.9f$rM?$($kEBPTT $N>19g$H$OO[$J$j!";~9ot_0 K*1kF~NOx_i(t_0) $H;~9ot N_K*1k65;U?.9fd_i(t) $rM?$($?$H$-!";~9ot K*1k=PNO%f%K%C%Hi \in O $N=PNOy_i(t) $,65;U?.9fd_i(t) KJkh$&$K3X=,$r9T$&!#

3NH-%M%C%H%o!<%/A4BN$N8m:94X?t$O!"

$$E(t) = \frac{1}{2} \sum_{i \in O} (e_i(t))^2 \tag{17}$$

$GM?$(i1$k!#

$?$@$7!"$e_i(t)$O

$$e_i(t) = \begin{cases} d_i(t) - y_i(t), & i \in O \text{ }\$N\$H\$- \\ 0, & \$=\$NB>\$N\$H\$- \end{cases}$$

G"$k!#

:G5^9_2<K!$K4p$E$$$F7k9g2Y=E$rJQ99$9k?aK$O!"7k9g2Y=E$NUQNIr\Delta w_{ij}$$H7F

$$\Delta w_{ij}(t) = -\eta \frac{\partial E(t)}{\partial w_{ij}} \tag{18}$$

$K=>$C$F7k9g2Y=E$rJQ99$9$lPh$$!#η $OA0@a$HF1MM!"3X=,N($rI=$7$F$$$k!#

3N8m:94X?tE(t) $r6K>.2=$9k?aK!"3F;~9oτ 4H$N7k9g2Y=Ew_{ij}(τ) $O;~9oτ KC0MB8$7$J$$Dj?tw_{ij}(τ)=w_{ij} G"kH2>Dj7F!"8m:94X?tE(t) $r7k9g2Y=E$GJPHyJ,9l$P

$$\frac{\partial E(t)}{\partial w_{ij}} = \sum_{\tau=t_0}^{t-1} z_j(\tau)\frac{\partial E(t)}{\partial s_i(\tau+1)} \tag{19}$$

$H5a$ail$k!#

$=$3$G!"

$$\delta_i(\tau) = \frac{\partial E(t)}{\partial s_i(\tau)}, \quad t_0+1 \le \tau \le t_1$$

H*1P!"$E(t)$r6K>.2=9kh&$J3X=,B'$O!"$\tau = t, t_0+1 \le \tau \le t-1$K0MB8$7$F

$$\delta_i(t) = (y_i(t)-d_i(t))f'_i(s_i(t)) \tag{20}$$

$$\delta_i(\tau) = f'_i(s_i(\tau))\sum_{l\in H\cup O} w_{li}\delta_l(\tau+1) \tag{21}$$

$GM?$(il$k!#

7?$,$C$F<0(18)$+$i!"7k9g2Y=E$N99?7$O

$$\Delta w_{ij}(t) = -\eta\sum_{\tau=t_0}^{t-1}\delta_i(\tau+1)z_j(\tau) \tag{22}$$

$K=>$C$F9T$(Ph$$!#

$^$?!"=i4|=E$_$O!"A0@aF1MM!"0lHL$K>.$5$JMp?t$K@_Dj5l$k!#

2.2.4 65;U6/@)

A0@a$^$G$NEBPTT $dRTBPTT Nh$&$J%j%+%l%s%H%M%C%H$N3X=,%"%k%4%j%:%`$KBP7F!"hj3X=,$,MF0W$KJkJ}K!H7$F!"Williams $HZipser Kh$k65;U6/@)(**teacher forcing**)[16][15] $H8F$Plk3X=,K!$,$"$k!#$=3G0J2<GO!"3N3X=,K!KD$$$F@bL@9k!#

3,AX7?%K%e!<%i%k%M%C%H$NBP Kh$k3X=,K*$$$F$O!"65;U?.9f$r=PNCHN8m:9H7FN$_MQ$$$F$$?$,!"%j%+%l%s%H%M%C%H$K$*$$$F$O%b$&1DJLNMxMQK!$,$"$k!#%j%+%l%s%H%M%C%H$K$*$$$F$O!"=PNC%K%e!<%m%s$N=PNC$b%U%#!<%I%P%C/!&k!<%W$KhC$FB>$N%K%e!<%m%s$N=PNC$K1F6A$rM?$($k!#$=N?a!"1;~9oA0$N@53N$J=PNCCM(65;U?.9f)$rF~NC$H7FMQ$$k3H,9M$($ilk!#3N$h

$&$J4QE@$+$i!"Williams $HZipser $O!"65;U6/@) $H8F$Plk3X=,K!$rDs0F$7$?
!#

65;U?.9f$r>e=R$Nh&$KMxMQ$9$k>l9g$K$O!"EBPTT !&RTBPTT Hb$K2.2.2
@a$N<0(7),(8) $GMQ$$$kzi(t) H7$F!"<0(6) $Nzi(t) NBeojK

$$z_i(t) = \begin{cases} x_i(t), & i \in I \text{ \$N\$H\$-} \\ y_i(t), & i \in H \text{ \$N\$H\$-} \\ d_i(t), & i \in O \text{ \$N\$H\$-} \end{cases} \tag{23}$$

$rMQ$$$lPh$$!#

3N;~!"=PNO$N%U%#!<%I%P%C%/$NBeoj$KM?$($k65;U?.9f$O!"30ItF~NO$H$7
$F07$&!#0J2<!"3l$r?^15 $H?^16 $rMQ$$F6qBNE*$K@bL@$9$k!#

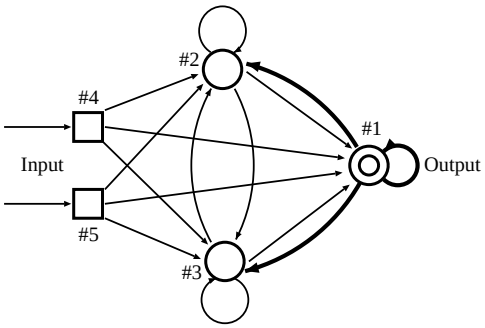

?^15: %j%+%l%s%H%M%C%H$NNc

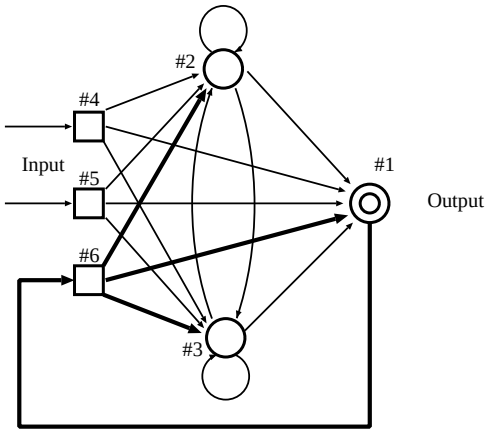

?^16: 65;U6/@)$N:]$N%j%+%l%s%H%M%C%H

Nc$($P!"?^15 $O!"%K%e!<%m%s?t3 8D$N%j%+%l%s%H%M%C%H G"$j!";M3Q$d4]
JI$N3F5-9f$N0UL#$O!"$3l^GN?^$HF1MM$G$"$k!#3N%j%+%l%s%H%M%C%H $K
65;U6/@)$rMQ$$$k>l9g!"?^15 $NB@$$Lp0u$G<($9%U%#!<%I%P%C%/$O?^16 K*$1
$kB@$$Lp0u$HEy2A$G$"$k!#$3$3$G!"?^15 $H?^16 K*1k3F%$%s%G%C%/%9O=
l>$lBP1~$7$F$$$k!#

?^16 K*$$F!"FP $r9T$&:]$N30It=PNO#1 $+$i$N%U%#!<%I%P%C%/$O!"$=$N
CM$,#6 $N30ItF~NO$K%3%T!<5l!"$=$3$+$iB>$N30ItF~NO$HF1MM$K3F%K%e!<%m%s
$K7k9g$5lk3HKhCF<B8=5l$k!#$3lKBP$7!"65;U6/@)$Khk3X=,;~$O!"
#6 $N30ItF~NO$K%3%T!<5lkN$O!"30It=PNO#1 $+$i%U%#!<%I%P%C%/5l$kCM
$KBP1~$9$k65;U?.9f$G$"$k!#

>e5-Nh$&$J65;U6/@)$H8F$Plk3X=,K!$rEBPTT $*$h$SRTBPTT $KE,MQ 9k>l9gKD$$F=RYk!#

EBPTT K*1k65;U6/@)GO!"3l$^$G$NEBPTT $N3X=,B'$N<0(15) $O

$$\frac{\partial d_l(t)}{\partial w_{ij}} = 0 \quad (l \in O) \tag{24}$$

$KCm0U$9lP!"$\tau = t_0 + 1 \leq \tau \leq t_1 - 1$ K*$$F

$$\delta_i(\tau) = f'_i(s_i(\tau)) * \left[(y_i(\tau) - d_i(\tau)) + \sum_{l \in H} w_{li}\delta_l(\tau + 1) \right] \tag{25}$$

$HJQ99$5lk3H$,$o$+$k!#

0lJ}!"RTBPTT K*1k65;U6/@)Gb!"EBPTT $N>l9g$HF1MM$K<0(24) $KCm0U$9lP!"3l$^$G$NRTBPTT $N3X=,B'$N<0(21) O\tau = t_0 + 1 \leq \tau \leq t_1 - 1$ K*$$F

$$\delta_i(\tau) = f'_i(s_i(\tau)) \sum_{l \in H} w_{li}\delta_l(\tau + 1) \tag{26}$$

$HJQ99$5lk3H$,$o$+$k!#

0J>eNh$&$K9k3H$G!"%M%C%H%o!<%/$N=PNO$,%U%#!<%I%P%C%/$5l?F~NO $K4X$7FO@5$7$$CM$,J]>Z$5lk$?$a!"3X=,$N:]$K=PNO$r@5$7$$CMK9k3$H $K=8Cf$9k3H,G-$k!#$3N?$a!"3X=,$,hjAa$/<}B+$9k3H,CNil$F $$k!#

K\>ON^Ha 0J>eNh$&$KK\>OK*$$F@bL@7F$-$?O"B3>uBV5!3#$H%j%+%l%s%H%M%C%H $N4X78$K$D$$F!"$*$h$S!"%j%+%l%s%H%M%C%H $N3X=,$K$D$$F$^$Hak$H!"0J2<$Nh&KJ$k!#

1. O"B3>uBV5!3#$H%j%+%l%s%H%M%C%H
   (a) O"B3>uBV5!3#
      i. F~=PNO$ON%;6CM!"%uBV$OO"B3CMG"$j!";~4V$ON%;6E*$K07$olk!#
      ii. $=$NG=NO$O!"O"B3CM$r07$($k$?$a!"%A%e!<%j%s%05!3#hj$bG=NO $,9b$/K|G=G"$k!#
   (b) %j%+%l%s%H%M%C%H
      i. %K%e!<%m%s!&b%G%kH7$F!"=\@~7AAG;R%b%G%k$,MQ$$$ilk!#
      ii. %U%#!<%I%P%C%/!&k!<%W$r;}$D%K%e!<%i%k%M%C%HG"$j!"=g=x 2sO)$HF1MM$K;~7ONs=hM}$r9T$&$3H,G-$k!#

iii. 7k9g2Y=EH7$FO"B3CM$r07$&$3H,G-kN$G!"%A%e!<%j%s%05!3#$rD6$($kG=NO$r;}$D!#

iv. <B83E*KO!"M-8B>uBV5!3#hj$bG=NO$,9b$/!"J8L.<+M3J8K!$K$O5Z$P$J$$$^Gb!"$=$l$K6a$$%/%i%9$r=hM}$G$-$k3H$,<($5lF$$$k!#

2. %j%+%l%s%H%M%C%H$N3X=,

(a) :NMQ9k3X=,%"%k%4%j%:%`

i. BP $HF1MM$N:G5^9_2<K!$K4p$E$/%"%k%4%j%:%`$N$&A!"87L)$JbNhj7W;;NL!&a%b%jNL$,>/$J$$BPTT $rMQ$$$k!#

ii. BPTT KO!":G>.2=9kBP>]$N0c$$Khj!"EBPTT $HRTBPTT $N2 DN%"%k%4%j%:%`$,$"$k!#

(b) **EBPTT**

:G8eNAX^GN3F;~9oK*1k=PNO?.9f$H65;U?.9f$H$NFs>h8m:9$NAmOB$r:G>.2=$9$k%"%k%4%j%:%`$G$"$k!#

(c) **RTBPTT**

8=;~9oK*1k=PNO?.9f$H65;U?.9f$H$NFs>h8m:9$r:G>.2=9k%"%k%4%j%:%`G"$k!#

(d) 65;U6/@)

3X=,Cf$K!"=PNO$r%U%#!<%I%P%C%/5;kBeojK!"$=$N=PNO$KBP1~$9$k65;U?.9f$r%U%#!<%I%P%C%/5;k3HG!"hj3X=,$rMF0W$K9kJ}K!G"$k!#

<!>OGO!"0J>e$NGX7J$rF'$^$(!"2f!9$N8&5f$NL\E*G"$k;~4VO"B3>uBV5!3#$K$D$$$F=R$Y!"$=$N<B8=$NJ}K!KD$$$F@bL@9k!#

Bh3 >O ;~4VO"B3>uBV5!3#H=$N3X=,J}K!

A0>O$G=R$Y$?$h$&$K!"=>Mh8&5f5lF-$?O"B3>uBV5!3#$O!"O"B3$J>uBV6u4V$H$=$N>e$NN%;6E*$J>uBVA+0\$KhC$FDj5A$5l?>uBV5!3#G"$k!#$=7F!"3l$O%j%+%l%s%H%M%C%H$KhC$F<B8=$5lk!#

7+$7!"<B$O%j%+%l%s%H%M%C%H$O;~4VO"B3$JF~NO$b=hM}$9k3H,G-$k[17]!#$=lK$b4X$oi:!"=>Mh$N%j%+%l%s%H%M%C%H8&5f$K$*$$$F$O!"2.1.3 @a$Nh&$K!"Reber J8K!$,@8@.9k%"%k%U%!%Y%C%HNs$H$$$&;~4VJ}8~$KN%;6E*$JF~NO$r07$C$F$$k!#

$=$3$G!"2f!9$N8&5f$NL\E*$O!";~4VJ}8~KbO"B3$JO"B3>uBV5!3#$r<B8=9k3HH9$k!#2f!9$O!"$=$Nh&$J>uBV5!3#$r ;~4VO"B3>uBV5!3#(**Temporally Graded State Machine**)$H8F$V3H$rDs>'$9$k!#%j%+%l%s%H%M%C%H$O;~4VO"B3$JF~NO$r=hM}G-k3H+$i!"%j%+%l%s%H%M%C%H$KhC$F;~4VO"B3>uBV5!3#$r<B8=G-$k2DG=@-$,$"$k$H9M$($k!#

$=$3$G0J2<!"$^$:<!@a$G$O!"$=$N;~4VO"B3>uBV5!3#$K$D$$$F!"=>Mh$NM-8B>uBV5!3#$dO"B3>uBV5!3#HNHf3S$r8r$($F@bL@$9$k!#$^$?!"$=$NG=NO$K$D$$$F$N9M;!$b9T$&!#

B3$$F3.2 @aGO!";~4VO"B3>uBV5!3#$r%j%+%l%s%H%M%C%H$KhC$F<B8=$9k?aN!"8&5f$NJ}K!$K$D$$$F@bL@9k!#%j%+%l%s%H%M%C%H$C0lHL$K3X=,KhCF9=@.5lkN$G!"<B:]$KMQ$$$k3X=,%"%k%4%j:%'KD$$$F=RYk!#5i$K!"%j%+%l%s%H%M%C%H$K;~4VO"B3>uBV5!3#$r3X=,$5$;$k>eGN=tLdBjH=$N2r7hK!$r=RYk!#

3.1 ;~4VO"B3>uBV5!3#

K\@aGO!";~4VO"B3>uBV5!3#HC2?$+$r@bL@9k!#$=$3$G0J2<$G$O!"$^$:$=$NF~=PNO$H>uBVA+0\$K$D$$$F!"M-8B>uBV5!3#$dO"B3>uBV5!3#$H$NHf3S$r8r$($F=RYk!#B3$$F!"$=$NG=NOKD$$$Fb!"$=$liNG=NOHNHf3S$r8r$($F@bL@$9$k!#

F~=PNO$*$h$S>uBVA+0\ ;~4VO"B3>uBV5!3#$r@bL@$9k?aK!"2.1 @a$GM-8B>uBV5!3#$HO"B3>uBV5!3#$NF~=PNO$d>uBVA+0\$rHf3S7?h&$K!"M-8B>uBV5!3#$dO"B3>uBV5!3#HNBPHf$r9T$&!#

$^$:!";~4VO"B3>uBV5!3#$NF~=PNO$O6&$KO"B3CM$r07$($k!#$=$7$F!"$=$N>uBV

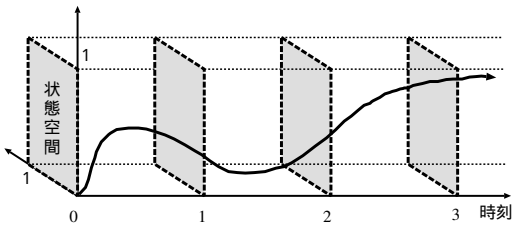

?^17: ;~4VO"B3>uBV5!3#K*1k>uBV A+0\

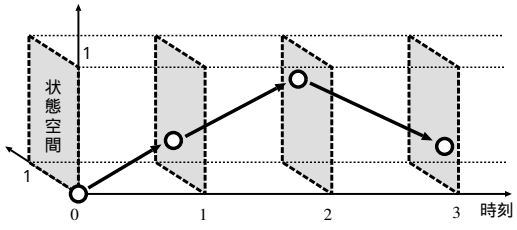

?^18: O"B3>uBV5!3#K*1k>uBVA+0\ (:F7G)

A+0\$O!"Nc$($P?^3.1 $N6J@~$NLp0u$G<($7$?50@W$Nh&KJ$k!#$3$3$G!"2#<4 $O;~9o!"=D<4$H1|8~$-$N<4KhCF2<!85$N>uBV6u4V$rI=7F$$k!#Hf3SN? aK!"O"B3>uBV5!3#$N>uBVA+0\$NMM;R$rI=$7$??^$r?^3.1 $K:F7G$7F*$/!#

?^3.1 $H?^3.1 $rHf3S$9kHo+kh$&$K!"O"B3>uBV5!3#$N>uBVA+0\$,?^3.1 $NGrH4$-$N4]$G<(9h$&$K;~4VJ}8~$KN%;6E*$K9TolkN$KBP$7!";~4VO"B3>u BV5!3#GO!";~4VJ}8~KbO"B3E*$K>uBVA+0\$,9Tol$k!#$9Jo$A!"O"B3>u BV5!3#$K$*$$$F!"$"$k;~9ot $N8=>uBV$,$s(t)$G$"$C$?;~$N<!>uBV$,$s(t+1)$G I=8=$5lkNKBP$7!";~4VO"B3>uBV5!3#$K$*$1$k<!>uBV$CHy>.;~4VΔt8e$N>u BV$s(t+\Delta t)$GI=8=$5lk!#

0J>e$+$i!";~4VO"B3>uBV5!3#$NF~=PNO!">uBV!";~4V$N07$$K$D$$F!"M-8B >uBV5!3#$HO"B3>uBV5!3#$H$NBPHf$r$^$Hak$H0J2<$Nh&KJ$k!#

1. M-8B>uBV5!3#

   F~=PNO!&uBV: N%;6CM

   ;~4V: N%;6

2. O"B3>uBV5!3#

   F~=PNO: N%;6CM

   >uBV: O"B3CM(<B?t)

   ;~4V: N%;6

3. ;~4VO"B3>uBV5!3#

   F~=PNO!&uBV: O"B3CM(<B?t)

   ;~4V: O"B3

;~4VO"B3>uBV5!3#$NG=NO >e5-$Nh&$J;~4VO"B3>uBV5!3#$NG=NOKD$$F9M ;!9k!#

2.1.1 @a$G=R$Y$?$h$&$K!"=>Mh8&5f5lF-$?O"B3>uBV5!3#$O!"M-M}?t$@$1$G

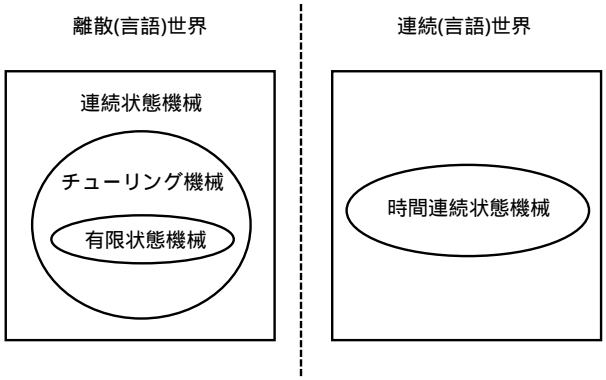

?^19: ;~4VO"B3>uBV5!3#$N5!3#%/%i%9$K$*$1$k0LCVIU$1

J/L5M}?t$b07$(k3H+$i%A%e!<%j%s%05!3#$hjbG=NO$,9b$/K|G=G"$k!#

7+$7!"A0=R$7$?$h$&$K!"O"B3>uBV5!3#K*$$F;~4V$ON%;6E*$K07ol$k!#$3lO!"=>Mh$NO"B3>uBV5!3#$^GN>uBV5!3#K*$$F$O!"Nc$($P%"%k%U%!%Y%C%H$Nh&$JN%;6E*$J%7%s%\%kKhCF9=@.5l$k!";~4VN%;6E*$J8@8l$r=hM}$9k?aG$"$k!#

3l$KBP$7!";~4VO"B3>uBV5!3#$OF~=PNO$*hS>uBV$KO"B3CM$,07$($k$@$1GJ$/!";~4V$N07$$bO"B3E*G"$k!#$D$^$j!"3l$O;~4VO"B3E*$J8@8l$r=hM}$9kbNG$"$k!#

3Nh&$K=hM}$9$k8@8l$N0c$$$Khj!";~4VO"B3>uBV5!3#O=$N7W;;G=NO$K$*$$F=>Mh$NM-8B>uBV5!3#$dO"B3>uBV5!3#$HF1Ns$KHf3S9k3H$,$G$-$J$$$?$a!"?^19$Nh&K=liHO0[JkOHAH$rDs6!$9kH8@($($k!#

0J>eNh$&$J;~4VO"B3>uBV5!3#$O!"==J,$fC/$jJQ2=$9$kO"B3$JF~NO$r%j%+%l%s%H%M%C%H$KM?$($k3HKhCF<B8=9k3H$,$G$-$k!#$=$3$G!";~4VO"B3>uBV5!3#$r%j%+%l%s%H%M%C%H$G<B8=$9k?aNJ}K!KD$$F!"<!@a$G@bL@$9$k!#

3.2 3X=,K*1k=tLdBj$H2r7hK!

;~4VO"B3>uBV5!3#$r%j%+%l%s%H%M%C%H$G<B8=9kK"$?$j!"Bh1>O$G=R$Y$?$h$&$K!":#2s$=$N4JC1JNcH7F!";~4VO"B3$JF~NO$KBP9k%]%8%F%#%V%(%C%8%H%j%,$N1bit-%b%8%e%m!&+%&%s%?$r%j%+%l%s%H%M%C%H$K3X=,$5$;$k3HK7$?$?!#

$3$3$G!"2.2.1@a$G=RY?h&$K!"BPTT$N3X=,%"%k%4%j%:%'KO!"<g$Kon-

line 3X=,$KMQ$$$ilkRTBPTT $H!"bff-line 3X=,$KMQ$$$ilkEBPTT $N2 $D $,$"$j!"$IAi$r3X=,$KMQ$$$k$+$r7hakI,MW$,$"$k!#

1bit-%b%8%e&m!&+%&%s%?$N%H%l!<%K%s%0!&Q%?!<%s$OD9$5$,M-8BD9NbNr 3X=,A0$KMQ0U$G$-$k3H$+$i!"bff-line 3X=,$r9T$(Ph$$!#$^$?!"8=;~9o$N65;U ?.9f$H=PNOHN8m:9$r:G>.2=$9$kRTBPTT KBP7$F!"%H%l!<%K%s%0!&Q%?!< %sA4BN$N8m:9$r:G>.2=9kEBPTT $NJ}$,hj87L)$K=PNO$r65;U?.9f$K6a$E$1 $k%"%k%4%j%:%'$G$"$k$H8@$($k!#

7?$,$C$F!"@h$N2 DN$&$A!"M-8BD9$N%H%l!<%K%s%0!&Q%?!<%sA4BN$N8m:9 $r:G>.2=$9$kEBPTT %"%k%4%j%:%'$rMQ$$$k3HK9$k!#

$=$3$G0J9_!"EBPTT %"%k%4%j%:%'$rMQ$$F%j%+%l%s%H%M%C%H$K3X=,$r9T$& :]$N=tLdBj$H2r7hK!$K$D$$F=RYF$$/!#$^$:<!@aGO!"M?$($k65;U?.9fKD $$F=RYk!#B3$$F3.2.2 @aGO!":NMQ9k%j%+%l%s%H%M%C%H$N%b%G%k$K$D$$ $F=R$Y$k!#$=7F3.2.3 @aGO!"2f!9$,:NMQ$9$k3X=,$NJ}K!KD$$F@bL@9k!#

3.2.1 65;U?.9f

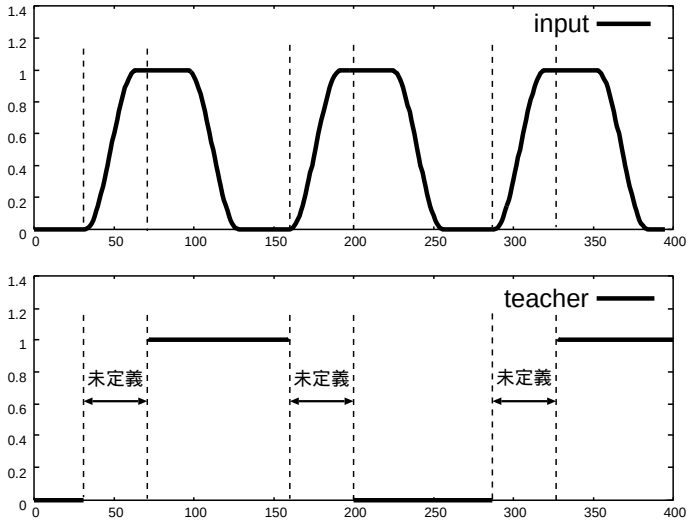

?^20: M?$($kF~NO$H65;U?.9f

K\@aGO!";~4VO"B3$JF~NO$N%]%8%F%#%V%(%C%8%H%j%,$N1bit-%b%8%e&m!&+%& %s%?$r3X=,5;$k:]$K!";~4VO"B3$KJQ2=$9$kF~NO$KBP1~9k65;U?.9f$rDj5A$9 $kJ}K!$K$D$$F@bL@9k!#$=$3$G0J2<$G$O!"$^$:F~NO$K$D$$F=R$Y!"B3$$F$= $NF~NO$KBP1~9k65;U?.9fKD$$F=RYk!#

F~NO %]%8%F%#%V% (%C%8%H%j%,$N1bit-%b%8%e&m!&+%&%s%?$K$*$1$k;~4VO"B3$J F~NOHO!"?^20 Nh$&$JbNG"$k!#F~NO$O0lEY0(low CM) rHkH$=$NCM$G 7Pi/$N4V0BDj$7!$$=$N8e!"Nc$ ($Psin 4X?t$G< (5lkh$&$J4Kd+$J%+!< %V$rIA$-$J$,$i1(high CM) XHO"B3E*$KJQ2=$9$k!#high CM$+$ilow CM$X$NJQ2= $bF1MM$H9k!#

65;U?.9f 3Nh&$JF~NO$KBP7FK>$^$7$$=PNO!"9JoA65;U?.9f$rDj5A$9 kI,MW,$"$k!#3NH-!"F~NO$,0lDj$NCM$G0BDj$7$F$$$k>l9gKOK>$^$7$$=P NO$OB8:_$9k,!"F~NO$,O"B3E*$KJQ2=7F$$k4V$N1bit-%b%8%e&m!&+%&%s%?$H 7F$N@5$7$$F0:n$H$$$&bN$OB8:_$7$J$$!#

$=$N$?$a!"K>$^$7$$=PNOCM$,B8:_$7$J$$Kb+$+$oi:!"$=$N4V$N65;U?.9f $rM=$aDj5A9k3HKhCF!"F~NO$,0BDj$7$F$$k:]$N!"K>$^$7$$=PNO$,B8:_ 9k>l9g$N3X=,K^$G1F6A$r5Z$\$9$3$HOHr1kY$-$G$"$k!#

$^$?<!Nh$&$JM}M3$+$i$b!"F~NO$,O"B3E*$KJQ2=$7$F$$k4V$N65;U?.9f$rM= $aDj5A$9k3HOHr1kY-G"$k!#

2>$K!"F~NO$,O"B3E*$KJQ2=$7$F$$k4V$N65;U?.9f$rM=$aDj5A$7$?$H9k!#

0lJ}!"A0=R7?h&$K!"3X=,$KMQ$$$kEBPTT $O87L)$K=PNO$r65;U?.9f$K6a E1h&H9$k%"%k%4%j%:%\$G$"$k!#$=$N$?$a!"EBPTT $OK>$^$7$$=PNO$,B8:_ 9k6h4V$HB8:_7J$$6h4V$NN>J}$N=PNO$rF1;~$KK~$?$9h&$J%j%+%l%s%H%M%C %H$r9=@.9kh&$KF/$/$,!"$=Nh$&$J2r$OB8:_$7$J$$2DG=@-$,$"$k!#

$=$Nh&$J>l9g$K$O!"K>$^$7$$=PNO$,B8:_$9$k6h4V$N$_!"=PNO$,$=$l$K==J, 6a$/Jkh&$J%j%+%l%s%H%M%C%H$G5(!"3X=,KhCF9=@.9k3H$O:$Fq HJ$k!#

0J>eNh$&$JM}M3$+$i!"2f!9$O!"F~NO$,O"B3E*$KJQ2=$7$F$$k4VK=$N;~9o K*1k=PNO$r65;U?.9f$H7FMQ$$$k3HK9$k!#$3$N;~!"$=$N;~9o$K$*$1$k 8m:9$,%H%l!<%K%s0!&Q%?!<%sA4BN$N3X=,$K1F6A$r5Z$\$5$J$$$3HO!"2.2.2 @a $N<0(15) hjL@i+G"$k!#$3Nh$&$K9k3H$G!"K>$^$7$$=PNO$,B8:_$7$J $$6h4V$N=PNO$rE,1~E*$K3X=,$9k3H,G-$k!#

$^$?!"?^21 Nh$&$K!"F~NO?.9f$,N)$A>e$,$j!"0BDj>uBV$KF~$kNr8+$F!"%j %+%l%s%H%M%C%H$OdO$j=PNO$rO"B3E*$KJQ2=$5$;$?NA<!$N0BDj>uBV$X$HA+0\ 9k3H$,K>$^lk!#D^$jF~NO?.9f$,0BDj>uBV$KF~C?=V4VGOJ/!"$=$N 7Pi/NA$K=PNO$,0BDj7F$$lPh$$H9M$($k!#

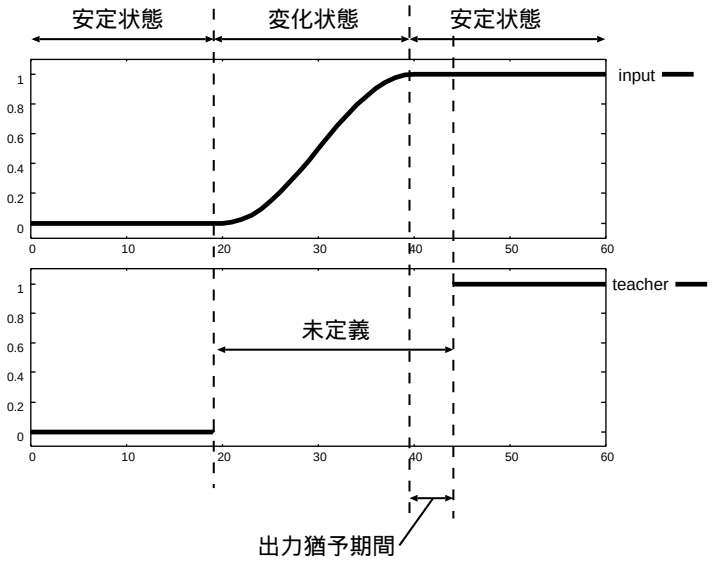

?^21: F~NO$NN)$A>e$,$j$H65;U?.9f

0J>eN3H+$i65;U?.9f$O!"F~NO$,N)$A>e$,$GF"$k0lDj4|4V$r7P$?8e$+$i!"<!$KF~NO$,N)$A>e$,$j;Oak$^$G$N4V$N$_M=$aDj5A9k3HK9$k(?^20)!#$J$*!"0J9_$GO3$N0lDj4|4V$N3H$rJX59E*$K=PNOM1M=4|4V$H8F$V(?^21)!#

3.2.2 :NMQ9k%j%+%l%s%H%M%C%H$N%b%G%k

A0@a$GDj5A$7$?$h$&$J65;U?.9f$r%j%+%l%s%H%M%C%H$KEBPTT $G3X=,$5$;$k:]KO!"2.2 @a$G=R$Y$?$h$&$K!":G5^9_2<K!$K4p$E$/3X=,%"%k%4%j%:%'$rMQ$$$k>l9gKO!"3X=,$N<}B+$K:GE,JAXN?t$d%K%e!<%m%s?t$,M=ao$+$i$J$$!"$H$$$&LdBj$,$"$k!#$=3GK\@aGO!"3$NLdBj$r2r7hG-$k%j%+%l%s%H%M%C%H$N%b%G%kKD$$$F@bL@9k!#

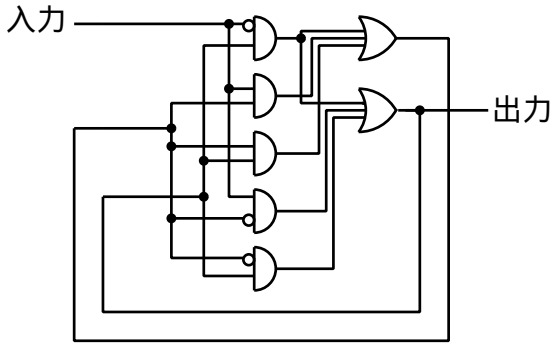

?^22: =g=x2sO)$G<B8=$5l?N%;6$N1bit-%b%8%e%m!&+%&%s%?

1bit-%b%8%e&m!&+%&%s%?$r=g=x2sO)$G<B8=9k>19g$O!"?^22$Nh&$K!"O@M}AG;R$,$$$/DI,MWG!"2?CJ$N2sO)$HJkN+$,!"@_7WCJ3,$Go+$k!#Nc$($P!"?^22$G$O!"7$D$NO@M}AG;R$rMQ$$$?2CJ$N2sO)$HJk3H$,$o$+$k!#

7+$7!"%j%+%l%s%H%M%C%H$K$*$$F!"Nc$($PF1MM$NN%;6E*$J%+%&%s%?$r<B8=$9$k>19g$G5(!"3X=,9k$?$aKI,MWJ%K%e!<%m%s$N8D?t$dAX$NCJ?t$r"i+8aM?$($k3HOG$-$J$$!#

$=$3$G2f!9$O!"40A47k9g$N%j%+%l%s%H%M%C%H$rMQ$$$k3HK7$?!#40A47k9g$N%j%+%l%s%H%M%C%HJi$P!"%K%e!<%m%s?t$,==J,G"lP!"G$0U$NCJ?t$N%M%C%H%o!<%/$r9=B$E*$KJq4^G-k+iG$"$k!#

0J2<!"3NM}M3KD$$$F@bL@9k!#

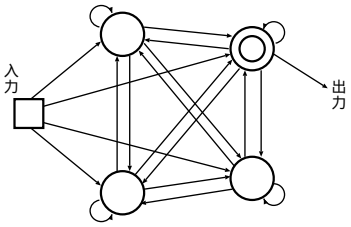

?^23: 40A47k9g$N%j%+%l%s%H%M%C%H$NNc

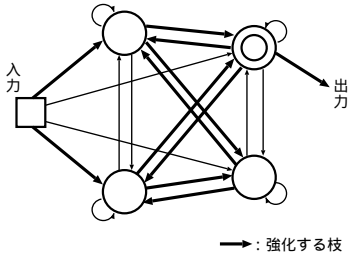

?^24: @hNNcN%j%+%l%s%H%M%C%H$N0lIt$N7k9g;^$r6/2=$7$?$b$N

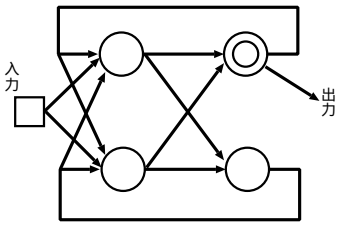

?^25: 6/2=7J$+$C$?;^$r<h$j=|$$$?bN

Nc$($P!"?^3.2.2Nh$&$J!"30ItF~NO(?^$N;M3Q)$,1DG!"4DN%K%e!<%m%s(?^$N4])$,40A47k9gHJCF$$k%j%+%l%s%H%M%C%H$,$"C?H9$k!#$?$@$7!"4DN%K%e!<%m%sN&AN0lDO30Ite=PNO(?^$NFs=E4])$HJC$F$$k!#$=$7$F!"$3$N%M%C%H%o!<%/$N7k9g;^$NA4$F$N=E$_$N=i4|CM$O!"2.2.2@a$G=R$Y$?M}M3$Khj!"==J,0$K6a$$$i%s%@%`$J?tCM$GM?$($ilF$$k$H9$k!#

3N%M%C%H%o!<%/$N7k9g;^$N=E$_$N$&$A!"?^3.2.2$NB@$$;^$N=E$_$O==J,0$K6a$$CMJNG=$N1F6A$rL5;k9k3H$,$G$-!"?^3.2.2$Nh&$J2CJ$NAX$r;}$C?%j%+%l%s%H%M%C%H$r<B8=$7$?$3HKJk!#

0J>eNh$&$K!"40A47k9g$N%j%+%l%s%H%M%C%H$JiP!"%K%e!<%m%s$N8D?t$rA}d9@1G!"G$0U$NCJ?t$N%M%C%H%o!<%/$r<B8=G-$k!#

7+$7!"40A47k9g$N%j%+%l%s%H%M%C%H$KBP$7!"3.2.1@a$GDj5A$7$?65;U?.9f

$rEBPTT $rMQ$$F3X=,5;$k:]$K$O!"<!@a$G=RYkh&$JLdBj$,$"$k$H9M$(
il$k!#$=3G<!@aGO!"3NLdBjKD$$F@bL@$7!"$5iK$=$N2r7hK!KD$$
$F=R$Y$F$$/!#

3.2.3 3X=,J}K!

3.2.1 @a$G=R$Y$?F~NO$H65;U?.9f$O!"<~4 |E*$KJQ2=9kF~NOK*$$F!"$"$k;~
9o$NF~NO$,F1$8>19g$K!"0[Jk65;U?.9f$rM?$($F$$k!#

3N;~!"$=$N$^$^EBPTT Kh$k3X=,$r9T$&:]$K$O!"DL>o$N40A47k9g$N%j%+
%l%s%H%M%C%H GO!"$"$k;~9o$GF10l$NF~NOKBP7$F0[$J$k65;U?.9f$r<1JL9k
I,MW$,$"k?$a!"L\E*$H9kF0:n$r3MF@$9kN$,:$FqG"k3H,M=B,5l$k!#

$=$3$G0J2<!"$^$:$3$NLdBjE@$K$D$$F>\:Y$K=R$Y!"5iK=$N2r7hK!$rDs<(
9k!#B3$$F!"$=$N2r7hK!$KBP$7!"5i$K3X=,$rMF0WK9k?aK!"2.2.4 @a$G
@bL@7?65;U6/@)rE,MQ9kN$G!"$=$NJ}K!$K$D$$F@bL@9k!#

LdBj EBPTT KhGF!"3.2.1 @a$GDj5A$7$?$h$&$JF~NO$H65;U?.9f$r!"40A47k
9g$N%j%+%l%s%H%M%C%H K=N^$^3X=,5;$k:]$K!"0J2<$K=RYkh&$JLdBj
$,@8$8k3H,9M$($ilk!#

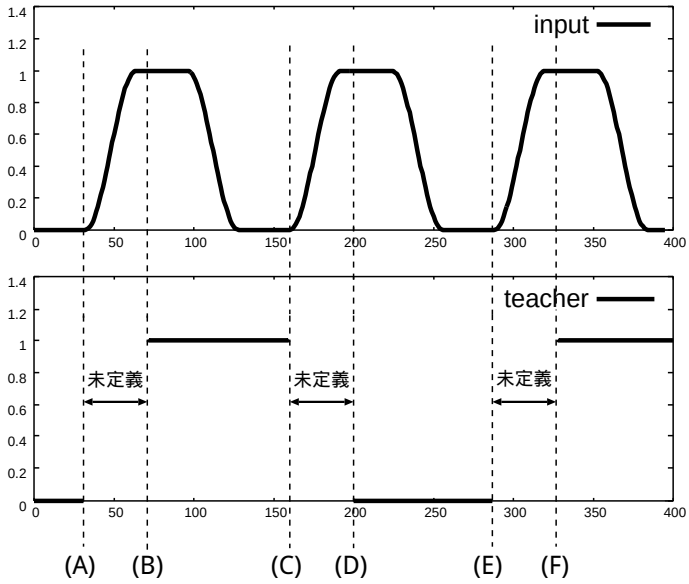

?^26: F~NO$H65;U?.9f$NNc

3.2.1 @a$GDj5A$7$?$bNHF1MM$N!"?^26 Nh$&$JF~NO$H65;U?.9f$,M?$(il
$?$H9k!#

?^NDLj!"F~NO$O<~4|E*$J?.9fG"kN$G!"A4$/F1$8N)$A>e$,$jKhCF!"=PNONCMrJQ2=5;kI,MW,$"$k!#

$=$3$G!"F10l$NF~NONCMKBP7F=PNONCMrJQ2=5;kK$O!"F~NO$,N)$A>e$,$kA0$K$*$1$k%j%+%l%s%H%M%C%H$N=PNO$N0c$$$rMxMQ9kI,MW$,$"$k!#Nc$($P!"?^$N(B)E@GO!"%j%+%l%s%H%M%C%H$N30It=PNO$,(A)E@$Glow$G$"$C$?$H$$$&>pJs$rMxMQ$7$F!"(A)E@$H(B)E@$N4V$NF~NO$NN)$A>e$,$jKh$j!"30It=PNO$Ohigh$G$"kI,MW,$"$k!#F1MM$K!"?^$N(D)E@GO!"%j%+%l%s%H%M%C%H$N30It=PNO$,(C)E@$Ghigh$G$"$C$?$H$$$&>pJs$rMxMQ$7$F!"(C)E@$H(D)E@$N4V$NF~NO$NN)$A>e$,$jKh$j!"30It=PNO$Olow$G$"kI,MW,$"$k!#

3N;~!"?^$N(B)E@$H(D)E@$N%j%+%l%s%H%M%C%H$N30It=PNOHJCF$$$k%K%e!<%m%s$NA4$F$NF~NO$rHf3S7?>19g!"$=$liO[JC$F$$$kI,MW$,$"$k!#$b$70[$JCF$$$J1l$P!"?^$N(B)E@$H(D)E@$G0[Jk=PNO$r=P$9$H$$$&H=CGr9k3H,G-J/JCF7$^$&$+$iG"$k!#

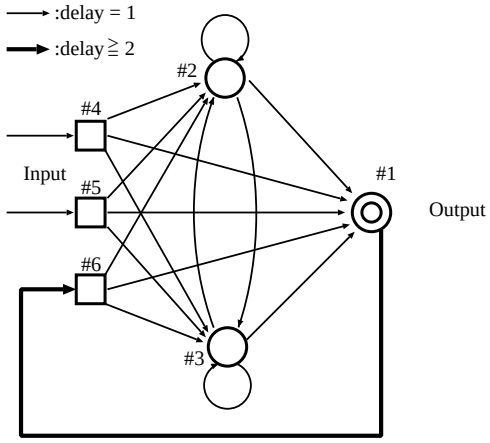

?^27:=PNONCYl$rF~NO$H9k%j%+%l%s%H%M%C%H

2r7hK! $=$3$G2f!9$O!"3Nh&$JM=B,$5lkLdBj$KBP$7!"3X=,$rMF0W$K9k$?$a!"3.2.2@a$G=R$Y$?40A47k9g$N%j%+%l%s%H%M%C%H$H$$$&9=B$$KBP7F!"?^27Nh$&$K!"=PNONCYl$rF~NO$K2s$9$3HK7?!#$3$3$G!"?^27$O%K%e!<%m%s3DNNcG"$k!#?^$N;M3Q$O30ItF~NO$r!"4]$HFs=E4]$O%K%e!<%m%s$rI=$7F*$j!"Fs=E4]$O30It=PNOHJCF$$$k!#3Nh&$K9$k3HKh$j!"?^26$K$*$$$F!"(B)E@GO(A)E@$N!"(D)E@$G$O(C)E@$N=PNO$r>pJs$N<1JL$KMxMQ$9k3H,G-kh$&$KJk!#

$^$?!"=PNOrCYi$;$k:]$NCY1d$NBg$-$5$O!"65;U?.9f$,L$Dj5A$G$"$k;~4VH9k3HK7?!#?^27 $N=PNO%K%e!<%m%s(#1) NCMO!"$=$N;~4VJ,$NCY1d$N8e$K30ItF~NO(#6) $K%3%T!<$5lk!#

$3$3$G!"?^27 Nh$&$K!"DL>o$N40A47k9g$N%j%+%l%s%H%M%C%H$N=PNO$N%U%#!<%I%P%C%/$KCY1d$rM?$($kNGOJ$/!"=PNO$NCYlr30ItF~NOK^o99=B$$HJC$F$$kNO!"2.2.4 @a$G=R$Y$?65;U6/@) $rMQ$$$k3H$rA0Ds$H7F$$$k$?$aG"$k!#0J2<!"$3$N%j%+%l%s%H%M%C%H$K$*$1$k65;U6/@) $rMQ$$?3X=,KD$$$F@bL@9k!#

65;U6/@) 0J>eNh$&$J!"=PNONCYl$rF~NO$H9k%j%+%l%s%H%M%C%H$rMQ$$$k:]KO!"2.2.4 @aGb=RY?h&$K!"%j%+%l%s%H%M%C%H$K$*$$F$O=PNO%K%e!<%m%s$N=PNO$bB>$N%K%e!<%m%s$N=PNO$K1F6A$rM?$($k!"$H$$&3H$KCm0U$9kI,MW,$"$k!#$=$N$?$a$K!"2.2.4 @a$G$O!"%j%+%l%s%H%M%C%H$N$=$Nh&$JE@$KCeL\$7!"3X=,$N2aDx$G1;~9oA0$N@53N$J=PNOCM(65;U?.9f)$rF~NO$H7FMQ$$$k$H$$$&65;U6/@)$, Williams iKhjDs0F5l$F$$$?NG$"$C$?!#

$=$3$G!"2f!9$O=PNONCYl$rF~NO$H9k%j%+%l%s%H%M%C%H$K65;U6/@)$r1~MQ9k3HK7$?!#0J2<!"$=$NJ}K!$K$D$$$F@bL@9k!#

2.2.4 @a$G=R$Y$?65;U6/@)$G$O!"%j%+%l%s%H%M%C%H$N!V;~9oA0$N65;U?.9f!W$r!"%U%#!<%I%P%C%/5l$k=PNO$NBeoj$KF~NO$H7F$$?!#

$=$l$KBP$7!"2f!9$O!"=PNO$NCYlrF~NOH9$k%j%+%l%s%H%M%C%H$rMQ$$$kNG!"$=$NCYlNJ,$@$1A0$N;~9o$N65;U?.9f$r=PNO$NCYlNBeoj$KMQ$$$kNG$"$k!#

3NH-!"65;U?.9frCYi$;$k:]$NCY1d$NBg$-$5$O!"A0$G=RY?NHF1MM$K!"65;U?.9f$,L$Dj5A$G$"$k;~4VG"$k!#$=$N;~4VJ,$NCYlr7P$F!"=PNO$NBeojK=$N=PNO$KBP1~9k65;U?.9f$,?^27 $Ndelay \geq 2$ $NB@@~$GI=5l$?%U%#!<%I%P%C%/!&k!<%W$rEAHB7FF~NOHJ$k!#

2f!9$O!"$3$N65;U6/@)$rMQ$$?EBPTT %"%k%4%j%:%\$r=PNONCYl$rF~NO$K2s$9%j%+%l%s%H%M%C%H$K1~MQ7F3X=,$r9T$&!#0J2<!"$=$NJ}K!KD$$$F@bL@9k!#

?^27 $N%j%+%l%s%H%M%C%H$r;~4VE83+9k$H!"Nc$($PCY1d$NBg$-$5$r8$H9k$H?^28 Nh$&$KJk!#?^28 $N%$%s%G%C%/%9$O!"?^27 $N3F%K%e!<%m%s5Z$S30ItF~NO$KBP1~$7$F$$k!#

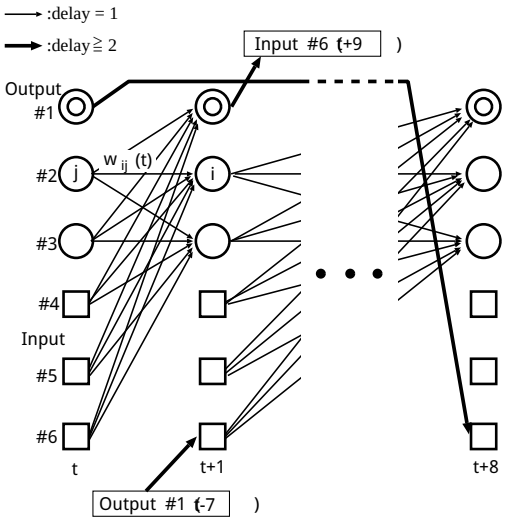

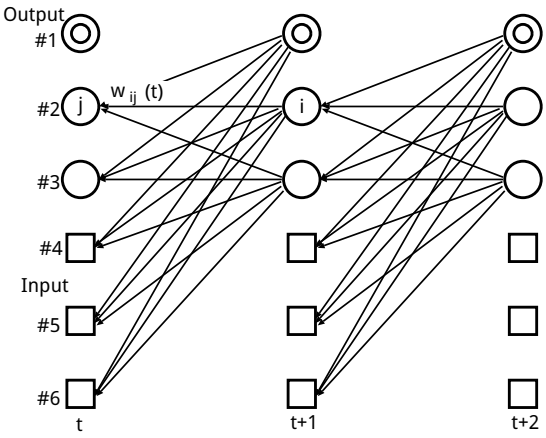

?^29: =PNONCYl$rF~NO$H9k%j%+%l%s

?^28: =PNONCYl$rF~NO$H9k%j%+%l%s %H%M%C%H$NEBPTT

%H%M%C%H$N;~4VE83+

?^28 Nh$&$J%M%C%H%o!<%/KBP7$F65;U6/@)$rMQ$$$?EBPTT $r9T$&>l9g!"8m:9$NEAHB$NU}8~$O?^29 K*1kLp0u$N8~$-Nh$&$KJk!#65;U6/@)N?aK=PNONCYl$r30ItF~NO$H7F07CF$$$k3H$+$i!"9YFN%K%e!<%m%s$+$i=PNO0J30$N%K%e!<%m%s(#2,#3) $*$h$S30ItF~NO(#4!A#6) XN8m:9$NEAHB$O!"DL>o$N%j%+%l%s%H%M%C%H $N>l9g$HF1MM$K9T$olk!#

7+$7!"DL>o$N%j%+%l%s%H%M%C%H $N>l9g$H0[Jj!"=PNO%K%e!<%m%sXN8m:9$NEAHB$O9Tol$J$$$#3l$O!"FP K*1k=PNO%K%e!<%m%s(#1) $+$i3F%K%e!<%m%s(#1!A#3) XN7k9g$O!"=PNO$NCYl,%3%T!<5l$k30ItF~NO(#6) $+$i3F%K%e!<%m%s(#1!A#3) XN7k9g$KBeBX$5lF$$$k$+$iG"$k!#

<B:]$K0J>e$NJ}K!$,M-8z$G$"$k3H$r!"4.1 @a$G8e=R9k!#

K\>ON^Ha 0J>eNh$&$KK\>OK*$$F@bL@7F$-$?;~4VO"B3>uBV5!3#KD$$F!"$*$h$S!"$=$N4JC1$JNcH7$F;~4VO"B3$JF~NO$N1bit-%b%8%e%m!&+%&%s%?$r<B8=9kJ}K!KD$$F$^$Hak$H!"0J2<$Nh&KJ$k!#

1. ;~4VO"B3>uBV5!3#
   (a) F~=PNO!">uBV$OO"B3CM$G$"$j!"$+$D;~4V$bO"B3E*$K07ol$k!#
   (b) $=$NG=NO$O!"O"B3E*$J@81$r=hM}$G$-$k$?$a!"=>Mh$NN%;6E*$J@81$r=hM}$9$k>uBV5!3#$H$OO[$J$kOHAH$rDs6!9k!#
2. 3X=,K*1k=tLdBj$H2r7hK!

(a) :NMQ9k3X=,%"%k%4%j%:%`%H%l!<%K%s%0!&Q%?!<%sA4BN$N8m:9$r:G>.
2=G-$kEBPTT $rMQ$$$k!#

(b) 65;U?.9f

i. F~NO$,N)$A>e$,$GF"$k0lDj4|4V$r7P$?8e$+$i!"<!$KF~NO$,N)$A
>e$,$j;Oak$^$G$N4V$N$_!"K>$^$7$$=PNO$,B8:_$9kN$G!"M=$a
Dj5A9k!#

ii. $=$l0J30$NItJ,$G$O!"K>$^$7$$=PNO$,B8:_$7$J$$$N$G!"3X=,Cf$K
$=$N;~9o$N=PNO$r65;U?.9fH9k3HKhj!"K>$^$7$$=PNO$,B8
:_9k6h4V$N3X=,$KK>$^$7$$=PNO$,B8:_$7$J$$6h4V$N1F6A$rM?$(
$J$$$h$&$K9k!#

(c) :NMQ9k%j%+%l%s%H%M%C%H$N%b%G%k
==J,$J%K%e!<%m%s?t$N40A47k9g$N%j%+%l%s%H%M%C%H$rMQ$$$k$3
HG!"INh&$J%K%e!<%m%s?t$HAX?t$N9=B$$G$bJq4^$G$-$kh&
K7$?!#

(d) 3X=,J}K!

i. =PNONCYl$rF~NO$H9k%j%+%l%s%H%M%C%H$rMQ$$$k3HKh$j!"
$"$kDxEY2a5n$N=PNO$rMxMQ9k3H$,$G$-!"F10l$N30ItF~NOG"$C
Fb!"2a5n$N0[$J$k=PNO$rMxMQ7F0[Jk65;U?.9f$r<1JL$9k3
H,G-$k!#

ii. 5i$K!"3X=,$rMF0WK9k?aK65;U6/@)$r1~MQ$7!"65;U?.9f
NCYl$rF~NO$H9k%j%+%l%s%H%M%C%H$rMQ$$$k3HK7$?!#

<!>OGO!"0J>e$NU}K!$KhC$F<B:]$K;~4VO"B3>uBV5!3#$,<B8=$G$-$k3H
$r<($9!#

Bh4>O %j%+%l%s%H%M%C%HK*1k;~4VO"B3>uBV5!3#$N<B8=

A0>O$G=R$Y$?J}K!$K4pE-!";~4VO"B3>uBV5!3#$N4JC1$JNcH7$F!";~4VO"B3$JF~=PNO$r9T$&%]%8%F%#%V%(%C%8%H%j%,$N1bit-%b%8%e%m!&+%&%s%?$r<B8=9k!#1bit-%b%8%e%m!&+%&%s%?K*1kF~NO$*$h$S65;U?.9f$N%Q%?!<%s$O!"3.2.1@a$G=RY?h&JbNG$"$k!#

$=$3$G0J2<!"$^$:<!@a$G$O!"C1$KDL>o$N40A47k9g$N%j%+%l%s%H%M%C%H$K65;U6/@)$rMQ$$$?>l9g$HH f3S$9k3HKhj!"=PNONCYl$rF~NO$K2s7?%j%+%l%s%H%M%C%H$K65;U6/@)$rMQ$$$?>l9g$N8z2L$r<($9!#B3$$F4.2@aGO!";~4VO"B3>uBV5!3#$N4JC1$JNcH7$F!";~4VO"B3$JF~NOKBP9$k1bit-%b%8%e%m!&+%&%s%?$r<B8=9k$?$a$N6qBNE*$J%Q%i%a!<%?Eyr=R$Y!"$=$N7k2L$H7F$NF~=PNO$N%0%i%U$rDs<($9$k!#$^$?!"$=$N;~$NFbIt>uBV$NF~=PNO$N%0%i%U$bDs<($9$k!#

J*!"0J2<GOFP12sJ,$N;~4V$r1%9%F%C%W$H8F$V3HK9$k!#

4.1 CY1d$N8z2L

K\@aGO!"C1$KDL>o$N40A47k9g$N%j%+%l%s%H%M%C%H$K65;U6/@)$rMQ$$$?>l9g$H!"3.2.3@a$G=RY?=PNONCYl$rF~NO$K2s7?%j%+%l%s%H%M%C%H$K65;U6/@)$rMQ$$$?>l9gHrHf3S9k!#

$=$3$G0J2<$G$O!"K\<B83$K$*$1$k3X=,$KMQ$$$?<o!9$N%Q%i%a!<%?$K@D$$$F6qBNE*$K@bL@$7!":G8eK=Nh$&$J>r7o$G3X=,$r9TC?e5-$N<B83$N7k2LKD$$$F=RYk!#

%H%l!<%K%s%0!&;%C%H ?^30Nh$&$J!";~4VO"B3$KJQ2=$9$kF~NO$,$"$kH9$k!#$=$NF~NO$,0$^$?$O1$G0BDj$7F$$k>uBV$r0BDj>uBV$H8F$S!"$=$N;~4V$r0BDj;~4V$H8F$VH9$k!#$^$?F1MM$K!"F~NO$,0$H1$N4V$rO"B3E*$KJQ2=$7F$$k>uBV$rJQ2=>uBV$H8F$S!"$=$N;~4V$rJQ2=;~4V$H8F$VH9$k!#

3N;~!"Hf3S$KMQ$$$k%H%l!<%K%s%0!&;%C%H$O<!$NTSNh$&$JbNG"$k!#

TS JQ2=;~4V$,0lDj$G!"0BDj;~4VN_$,0[$J$kF~NO%Q%?!<%s$KhC$F9=@.

3Nh&$J%H%l!<%K%s%0!&;%C%H$r3X=,9k3H$O!"C1$K$"$kD9$5$N%]%8%F%#%V%(%C%8$GJQ2=$9$k%+%&%s%?$r3X=,9k3HG"$k!#

7+$7!"DL>o$N40A47k9g$N%j%+%l%s%H%M%C%H$K65;U6/@)$rMQ$$$F3X=,$r

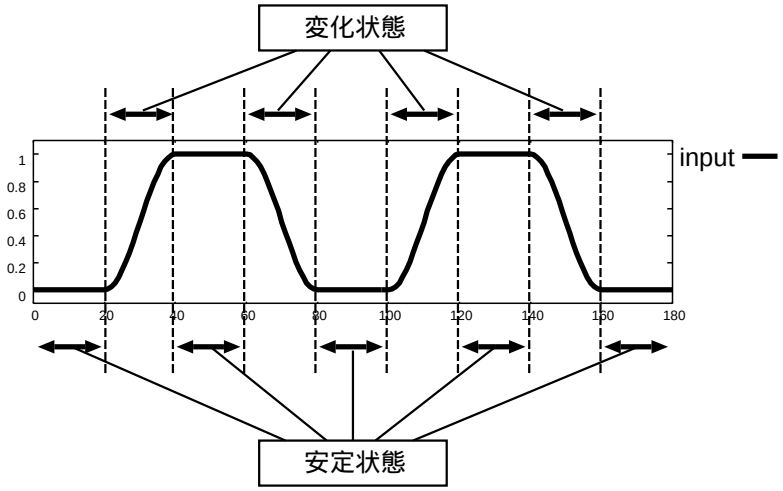

?^30: F~NO$N0BDj>uBV$HJQ2=>uBV

9TCF$b!"$3Nh$&$J4JC1$JLdBj$G$"$CFb3.2.3 @a$G=R$Y$?$h$&$K2a5n$N=PNO$N0c$$$rMxMQ9k3H$,$G$-$J1l$P!"3X=,$9k3HOFq$7$$$H9M$($ilk!#hC$F!"$=lr3N$+$ak?aK$O!"TS Nh$&$J%H%l!<%K%s%0!&;%C%H$G==J,G"$k!#

3N%H%l!<%K%s%0!&;%C%H$K4^$^lk3F%H%l!<%K%s%0!&Q%?!<%s$O!"JQ2=;~4V!0BDj;~4V6&$K0lDj$N<~4|?.9f$H9k!#1DN%H%l!<%K%s%0!&Q%?!<%s$OF~NO$N4<~4|J,!"9JoA=PNO$N2<~4|J,$H9k!#

3N%H%l!<%K%s%0!&;%C%HK*1k0BDj;~4V$N:G>.CM$O8%9%F%C%W!":GBgCM$O32%9%F%C%W$H9k!#0BDj;~4V$O:G>.CM$+$i:GBgCM$^$G4%9%F%C%W9o$_NCMrHk!#$^$?!"JQ2=;~4V$O4%9%F%C%W$G0lDjH9$k!#

1DN%H%l!<%K%s%0!&;%C%H$O!"0BDj;~4V!&JQ2=;~4V$NAH$_9g$o$;$KhC$F@8@.$5lkA4FN%H%l!<%K%s%0!&Q%?!<%sKhCF9=@.5l$k!#TS GO(0BDj;~4V, JQ2=;~4V)$,$(8,4),(12,4),\cdots,(32,4)$N7<oN`$N%H%l!<%K%s%0!&Q%?!<%s$+$i@.$k!#

J*!"65;U?.9fK*1k=PNOM1M=4|4V$O!"$I$N%H%l!<%K%s%0!&Q%?!<%s$K$*$$F$b4%9%F%C%W$H9k!#

3X=,J}K! A0=R$N%H%l!<%K%s%0!&;%C%H$rMQ$$$FEBPTT $r9T$&!#%H%l!<%K%s%0!&;%C%HKBP9$k3X=,$O!"$=$N3F%H%l!<%K%s%0!&Q%?!<%s$r%5%$%/%j%C%/$K9T$C$?!#$^$?!"%H%l!<%K%s%0!&;%C%H$r3X=,G-$?$+H]$+$OEBPTT 100,000 2s J,9TC?;~$N%H%l!<%K%s%0!&Q%?!<%sA4BN$NFs>h8m:9$,A4FN%H%l!<%K%s%0!&

%Q%?!<%sK*$$FL\I8CM0.001 $r2<2s$C$?$+I&$+$GH=Dj7?!#J*!"3X=,N(
η $O0.025 H7$?!#

%j%+%l%s%H%M%C%H %K%e!<%m%s?t$O!"=PNO$NCYlrF~NO$K2s$9>l9g!"$=$&GJ
$$>l9g!"$=$l$>$l4 8D!"8 8D!"16 8D($=$NFb$N1 8D$O30It=PNO)$N40A47k9g$N
%j%+%l%s%H%M%C%H$rMQ$$k!#F~NO$OA4It$G3<dN'B8:_$7!"1 DO2.1.2@a$G=R$Y
$?ogCM$N3X=,N?aK91>oE*$K1 G"$kF~NOG"$j!"1 DO!"%H%l!<%K%s%0!&Q
%?!<%sN?aNF~NOG"$j!"$b$&1 D,=PNO$NCY1dN?aNF~NOG"$k!#CY1d
$O!"JQ2=;~4V4%9%F%C%W$H=PNOM1M=4|4V4%9%F%C%WNOBG$"$k8%9%F%C%W$H$7
$?!#%j%+%l%s%H%M%C%H$N=i4|=E$_$O!"-0.1 $+$i0.1 $NHO0O$G%i%s%@%'KDja$k!#
%7%0%b%$%I4X?t$NDj?t9'$O1.0 H9$k!#

Hf3S 0J>eNh$&$J%Q%i!<%?$rMQ$$F!"

RNN1 =PNONCYl$rF~NO$K2s7?40A47k9g$N%j%+%l%s%H%M%C%H

RNN2 DL>o$N40A47k9g$N%j%+%l%s%H%M%C%H

$N2<dN'$N%M%C%H%o!<%/KBP7$F3X=,$r100<dN'$NAj0[$J$k=i4|=E$_KBP7$F
9TC?!#$=$N7k2L!"A0=R$N%H%l!<%K%s%0!&;%C%HTS $r3X=,$G$-$?2s?t$O!"I=
1 Nh$&$KJC$?!#

	%K%e!<%m%s?t		
	4 8D	8 8D	16 8D
RNN1	4	31	55
RNN2	0	0	0

I=1: %H%l!<%K%s%0!&;%C%H$r3X=,$G$-$?2s?t

I=1 $,<($9h&$K!"DL>o$N40A47k9g$N%j%+%l%s%H%M%C%H$G$O!"A0=R$N%H%l!<
%K%s%0!&;%C%HTS $rA4$/3X=,9k3H$,$G$-$J$+$C$?!#$7$+$7!"=PNONCYl
$rF~NO$K2s$9%j%+%l%s%H%M%C%H$G$O!"%K%e!<%m%s?t4 8D$N>l9g$N7k2L$G$O!"3X
=,$N@.8yN($,4%HJj"$^$j8z2L$,=P$F$$$J$$h$&$K8+$($k$+$b7l$J$$,!"
$=$l$O%K%e!<%m%s?t$NLdBjG"$j!"%K%e!<%m%s?t$r8 8D!"16 8D$HA}$d$9$3HK
hj!"M-0U$J:9$,F@il$?!#$3$N7k2L$h$j!"=PNO$NCYlrF~NO$K2s$9%j%+%l%s
%H%M%C%H$N3X=,$K*lkM-8z@-$OL@$i$+$G$"$k!#

0lJ}!"DL>o$N40A47k9g$N%j%+%l%s%H%M%C%H$N>l9g$N3X=,G-$k2s?t$O!"$=$l
0J2<G"m&3H$OM=B,$G$-$?bN$N!"A4$/3X=,G-J+C?3HKD$$F$O!"
2?$+860x$,$"$k$H9M$(il$k!#$=3G0J2<GO$=$N860x$rD4$Yk?aK!"3X=,
Cf$NFP $NMM;R$r8+F_k3HK9k!#

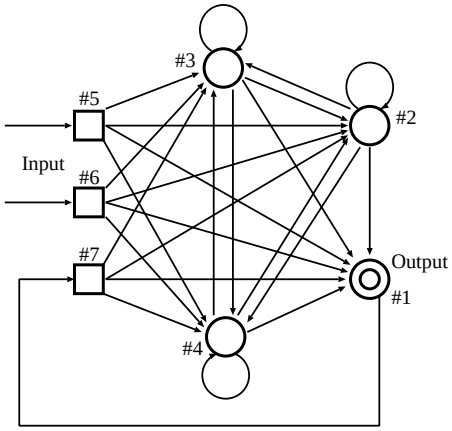

?^31: %K%e!<%m%s4 8D$NDL>o$N40A47k9g$N%j%+%l%s%H%M%C%H

DL>o$N40A47k9g$N%j%+%l%s%H%M%C%H$N3X=,Cf$NFP A0=R$N%Q%i%a!<%?$rMQ$$
$F!"DL>o$N40A47k9g$N%j%+%l%s%H%M%C%H$K3X=,$r9T$C$?!#3X=,Cf$N%j%+%l%s
%H%M%C%H$NFbIt$r2r@O7d$9$$$h$&$K!"A0=R$N3<oN`$N$&$ANG$-$k$@$1>/$J
$$%K%e!<%m%s?t$rMQ$$$k3H$K$7!"?^31Nh$&$K48DH7$?!#

3X=,Cf(EBPTT 20,000 2sL\)K*1k30ItF~NO$H65;U?.9f$*hS3F%K%e!<
%m%s$N=PNO$O!"?^32Nh$&$KJC$?!#3F?^$N%K%e!<%m%s$N%$%s%G%C%/%9(#1
!A#4)$O?^31$N%$%s%G%C%/%9$KBP1~7F$$$k!#J*!"2#<4$O%9%F%C%W!"=D<4
$OF~NO!&=PNO$NCMG"$k!#F~NO$rE@@~!"=PNO$r<B@~$G<(7F$"$k!#

=PNO%K%e!<%m%s$N=PNO(?^32$N#1)$r8+$k$H!"0l8+F~NO$NN)$A>e$,jG=PNO
$rJQ2=$5$;$k3H$,$G$-$F$$$kh&$K8+$($k!#

7+$7!"<B:]$O!"B>$N1#$l%K%e!<%m%s(?^32$N#2!A#4)$r8+kHo+$k
h&$K!"=PNOM1M=4|4V$,=*oC$?D>8e$NF1$8F~NO$G$O!"1#$l%K%e!<%m%s$N=PNO
K[Hs$I:9$,$J$$!#Nc$($P!"F~NO$,N)$A>e$,$C$F=PNOM1M=4|4V$,=*oC$?;~
9oG"$k16%9%F%C%WL\$H40!"64!"88%9%F%C%WL\$K$*$1$k1#$l%K%e!<%m%s$N
=PNO$rHf3S$9kH!"$=$NCMK[Hs$I:9$,$J$$$3H,o+$k!#

5i$K!"?^32$N65;U?.9f$H#1$rHf3S9k$H!"65;U6/@)$GF~NOH7$FMxMQ$5

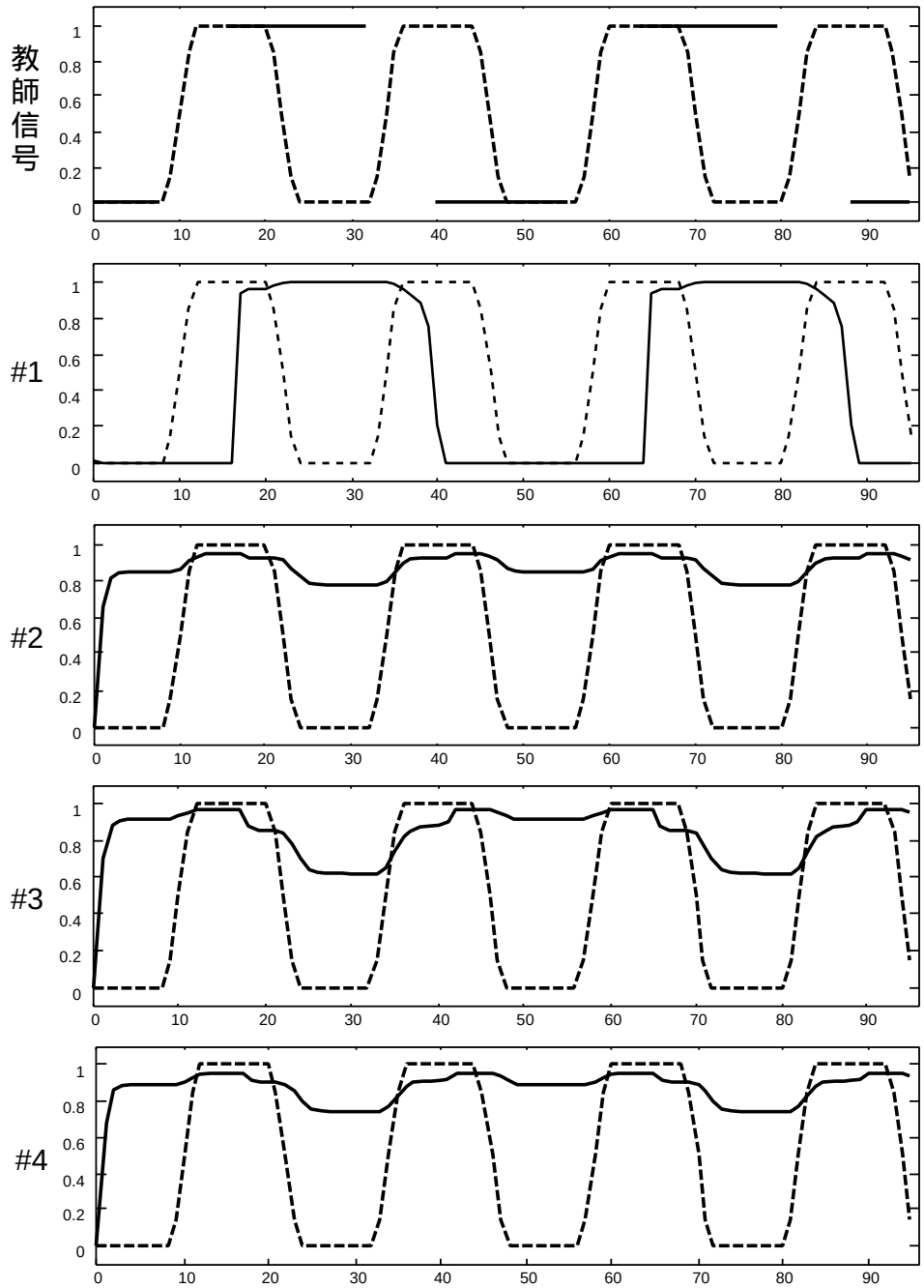

?^32: 3X=,Cf$N65;U?.9f$H3F%K%e!<%m%s(#1!A#4) $NF~=PNO: F~NO(E@@~), 65 ;U?.9f$*$h$S=PNO(<B@~)

lk65;U?.9f$NJQ2=$N8e!"=PNO%K%e!<%m%sNCMrJQ2=5;$F$$k3H$,$o$+$k!# Nc$($P!"F~NO$,N)$A>e$,$C$F=PNOM1M=4|4V$,=*oC$?;~9o$G$"$k16%9%F%C%WL\ $K65;U?.9f$O1 $H$$$&CM$r=P$7F*$j!"$=$N8e$N17%9%F%C%WL\$K!"=PNO%K%e!<

%m%sNCMO$*$h$=1$HJC$F$$$k!#3l$O!"16%9%F%C%WL\$N3F1#$l%K%e!<%m%s$N=PNO$,!"@h$K=RY?h&$K!"$[Hs$IB>$N>l9g$H0c$$$,$J$$$?$a!"=PNO%K%e!<%m%s$,JQ2=9k$?$aKO!"16%9%F%C%WL\$N65;U?.9f$N1$H$$$&CMKhk7$+$J$$$+i@$H9M$(il$k!#

0J>e$+$i!"3N$^$^3X=,$rB3$1Fb!"30ItF~NOH7FN65;U?.9f$,B8:_$7$J$$DL>oNFPr9TC?;~$K!"0[$J$k65;U?.9f$r<1JLG-$J$$$3H,o+$k!#

7+$7!"$J$<3X=,$KhC$F1#$l%K%e!<%m%s$N=PNO$K:9$,=P$kh&KJiJ$$$+$O!"L$$@ITL@G"$j!":#8e$N2]BjG"$k!#

0J>eNh$&$K!"DL>o$N40A47k9g$N%j%+%l%s%H%M%C%HGO!";~4VO"B3$JF~NO$KBP9k1bit-%b%8%e%m!&+%&%s%?$r<B8=$G$-$:!"<B8=9k$?$aKO=PNONCYl$rF~NO$K2s7?%j%+%l%s%H%M%C%H$rMQ$$$?J}$,$h$$$3H,o+C?!#$=$3$G<!@a$G$O!"<B:]$K3N=PNONCYl$rF~NO$K2s7?%j%+%l%s%H%M%C%H$rMQ$$$F!";~4VO"B3>uBV5!3#$r<B8=$9$k!#

4.2 ;~4VO"B3>uBV5!3#$N<B8=

K\@aGO!"<B:]$K!";~4VO"B3>uBV5!3#$N4JC1JNcH7F!";~4VO"B3$JF~NO$r=hM}9k%]%8%F%#%V%(%C%8%H%j%,$N1bit-%b%8%e%m!&+%&%s%?$r<B8=9k!#$=$3$G!"A0@a$G$=$NM-8z@-$r<($7$?=PNO$NCYlrF~NO$K2s$7$?%j%+%l%s%H%M%C%H$K65;U6/@)$rMQ$$$k3HKh$j!"$3lr<B8=9k3HK9$k!#$5iK!"$=$NFbIt$NF0:n$rD4Yd$9$$$h$&!"$G$-$k$@$1>/$J$$%K%e!<%m%s?t$G<B8=$7$?$N$G!"%j%+%l%s%H%M%C%H$N3F%K%e!<%m%s$NF~=PNO$b9go;$FDs<($7$F!"$=$NF0:n$r8+F_k3HK9k!#

$=$3$G0J2<$G$O!"K\<B83$K$*$1$k3X=,$KMQ$$$?<o!9$N%Q%i%a!<%?$K$D$$$F6qBNE*$K@bL@$7!":G8eK=Nh$&$J>r7o$G3X=,$r9TC?<B83$N7k2L$K$D$$$F=RYk!#

%H%l!<%K%s%0!&;%C%H %H%l!<%K%s%0!&;%C%H$O2<oN'MQ0U$9$k!#$=lO0J2<Nh$&$JbNG"$k!#

TS1 JQ2=;~4V$,0lDj$G!"0BDj;~4VN_$,0[$J$kF~NO%Q%?!<%s$KhC$F9=@.

TS2 JQ2=;~4V!&0BDj;~4V6&$K0[$J$kF~NO%Q%?!<%s$KhC$F9=@.

TS1 $N%H%l!<%K%s%0!&;%C%H$r3X=,9k3H$O!"A0@a$NTS$r3X=,$9k3HHF1$8$G$"$j!"C1K"$kD9$5$N%]%8%F%#%V%(%C%8$GJQ2=9k%+%&%s%?$r3X=,$9k3HG$"$k!#$=$7$F!"TS2 $N%H%l!<%K%s%0!&;%C%H$r3X=,9k3H$O2?G!$J

$kD9$5$N%]%8%F%#%V%(%C%8$KBP7F$bF/$/%+%&%s%?$r3X=,$9k3HG$"$k!#3N2DN3X=,KOJLNFq7$5$,B8:_9k$H9M$(ilk$?$a!"%H%l!<%K%s%0;%C%H$r2$D$KJ,$1!"CJ3,E*$K3X=,$r9T$&!#

3F%H%l!<%K%s%0!&;%C%H$K4^$^lk3F%H%l!<%K%s%0!&Q%?!<%s$O!"A0@a$HF1MM$K!"JQ2=;~4V!&BDj;~4V6&$K0lDj$N<~4|?.9f$H$7!"F~NO$N4<~4|J,!"9JoA=PNO$N2<~4|J,$H9k!#

3F%H%l!<%K%s%0!&;%C%HK*1k0BDj;~4V!&JQ2=;~4VN=l>$l:G>.CM!&GBgCM$rI=2$K<($9!#0BDj;~4V!&JQ2=;~4VO=l>$l:G>.CM$+$i:GBgCM$^$G4%9%F%C%W9o$_NCMrHk!#

1DN%H%l!<%K%s%0!&;%C%H$O!"0BDj;~4V!&JQ2=;~4V$NAH$_9g$o$;$KhC$F@8@.$5lkA4FN%H%l!<%K%s%0!&Q%?!<%sKhCF9=@.5l$k!#Nc$(!P!"TS2$O(0BDj;~4V, JQ2=;~4V)$,(8,4),(8,8),···,(8,128),(12,4),···,(32,128)$N!"0BDj;~4V7<oN'$HJQ2=;~4V32<oN'$N@Q$G$"$k224<oN'$N%H%l!<%K%s%0!&Q%?!<%s$+$i@.$k!#

J*!"65;U?.9fK*1k=PNOM1M=;~4V$O!"A0@a$HF1MM!"IN%H%l!<%K%s%0!&%Q%?!<%sK*$$F$b4%9%F%C%W$H9k!#

	0BDj;~4V		JQ2=;~4V	
	:G>.CM	:GBgCM	:G>.CM	:GBgCM
TS1	8	32	4	4
TS2	8	32	4	128

I=2: 3X=,$KMQ$$$?%H%l!<%K%s%0!&;%C%H

3X=,J}K! A0=R$N2$D$N%H%l!<%K%s%0!&;%C%H$rMQ$$$FEBPTTKh$k3X=,$r9T$&!#$^$:

1.) TS1$rMQ$$$F3X=,$r9T$$!"

B3$$$F

2.) 1.)$r3X=,:Q$_$N%j%+%l%s%H%M%C%H$KBP$7TS2$rMQ$$$F3X=,$r9T$&!#3F%H%l!<%K%s%0!&;%C%HKBP9$k3X=,$O!"$=$l$>$l$K4^$^lk3F%H%l!<%K%s%0!&Q%?!<%s$r%5%$%/%j%C%/$K9T$C$?!<%3F%H%l!<%K%s%0!&;%C%HKBP9$k3X=,$O!"TS1KD$$F$OA0@a$HF1MM$KEBPTT 100,000 2sJ,9T$$!"TS2KD$$F$O!"TS1$h

jb%H%l!<%K%s%0!&Q%?!<%s?t$,B?$$?$a!"EBPTT 400,000 2sJ,9T$C$?!#$J $*!"3X=,N($\eta$ $O0.025 H7$?!#

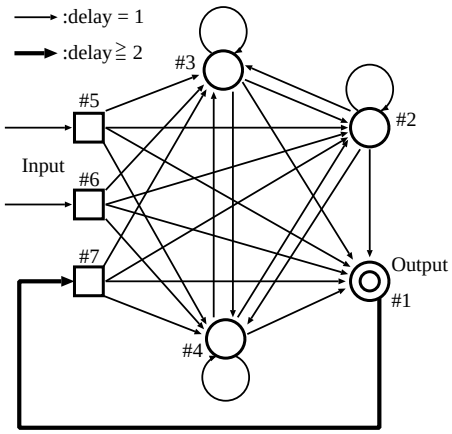

?^33: %K%e!<%m%s4 8D$N=PNC$NCYlrF~NC$K2s$7$?4 0A47k9g$N%j%+%l%s%H%M%C%H

%j%+%l%s%H%M%C%H ?^33 Nh$&$J!"%K%e!<%m%s?t4 8D($=$NFb$N1 8D$,30It=PNC) $N40A47k9g$N%j%+%l%s%H%M%C%H$rMQ$$$k!#<B838e!"FbIt$NF0:n$r8+d9$$h $&$KG-k@$1>/$J$$%K%e!<%m%s?tH7$?!#F~NC$OA0@a$HF1MM$KA4It$G3<dN`B8:_$7!"1 DO2.1.2 @a$G=R$Y$?ogCM$N3X=,N?a$K91>oE*$K1 G"$kF~NC$G$"$j!"1 DO!"%H%l!<%K%s%0!&Q%?!<%sN?a$NF~NC$G$"$j!"b&1 D,=PNC$NCY1d$N$?a$NF~NCG"$k!#

CY1d$O!"JQ2=;~4V$N:G>.CM4 %9%F%C%W$H=PNCM1M=4|4V4 %9%F%C%W$NOBG"$k 8 %9%F%C%W$G0lDjH7$?!#$3lO!"<!$NM}M3$Khk!#TS1 G^$:JQ2=;~4V4 %9%F%C%W$G0lDj$N%]%8%F%#%V%(%C%8$N%+%&%s%?$r3X=,$9$k:]$K!"==J,$JCY1d$rM?$($F3X=,$r2DG=$K9k3HKh$j!"2a5n$N=PNC$N0c$$$rMxMQG-$k%M%C%H%o!<%/$,F@ilk3$H,9M$(il$k!#$3$N8e!"TS2 $N3X=,$r9T$&$3HKhG$F!"CY1d$NBg$-$5Khi:$K;~4VO"B3$J1bit-%b%8%e%m!&+%&%s%?H7FNF0:n$r9T$(kh$&$K9k$?a$G$"$k!#

%j%+%l%s%H%M%C%H$N=i4|=E$_$O!"0.1 $+$i0.1 $NHCOO$G%i%s%@%`$KDj$a$k!#7%0%b%$%I4X?t$NDj?t9`$O1.0 H9$k!#

<B837k2L 0J>eNh$&$J%Q%i%a!<%?$rMQ$$$F3X=,$r9T$C$?7k2L!"JQ2=;~4V$,4 $+$i128 %9%F%C%WJi$P!"G$0U$N0BDj;~4V$NF~NCKBP7$F%]%8%F%#%V%(%C%8%H %j%,$N1bit-%b%8%e%m!&+%&%s%?H7$FF/$/%j%+%l%s%H%M%C%H$r<B8=$9k3$H

$,$G$-$?!#5i$K!"JQ2=;~4V$K$*$1$kF~NO$NJQ2=4X?t$r$sin$0J30$K!"L$3X=,$N@~7?!&X?t!&BP?tKJQ($F;n$7$?!#

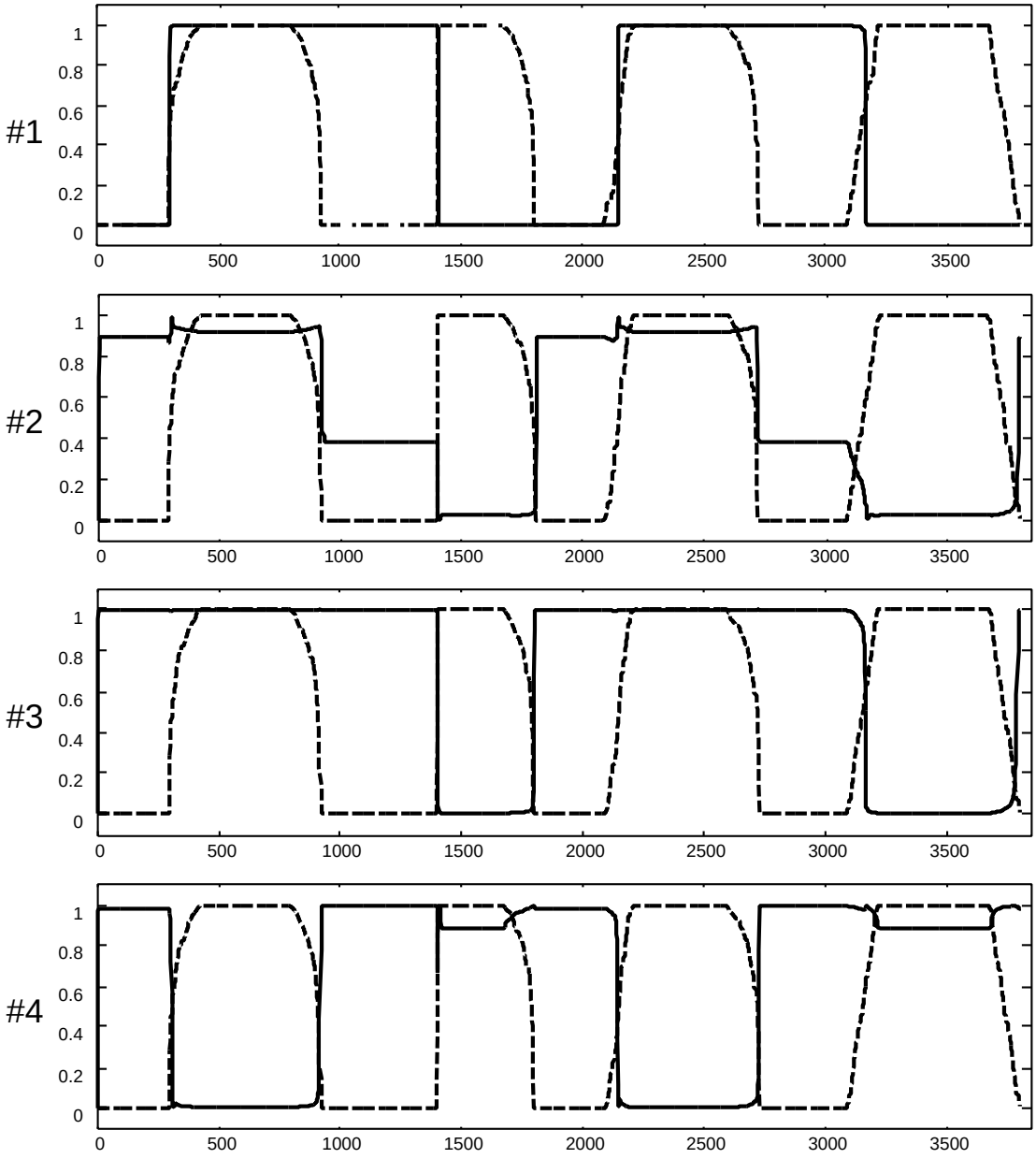

?^34: 3X=,8e$N3F%K%e!<%m%s(#1!A#4)$NF~=PNO: F~NO(E@@~), =PNO(<B@~)

$=$N7k2L!"$=$Nh&$JF~NO%Q%?!<%s$KBP7F$b%]%8%F%#%V%(%C%8%H%j%,$N%+%&%s%?H7$FF/$/3H$r3NG'$7$?!#^34 $O!"UQ2=;~4V$r128%9%F%C%W$H$7!"5i$KJQ2=4X?t$r@h$N4<cN'$+$i%i%s%@%'$KM?$(!"F~NO$N0BDj;~4V$r3X=,;~$N:G

BgCMG"$k32%9%F%C%W$hjbBg$-$J256%9%F%C%W$+$i512%9%F%C%W$N4V$N%i%s%@%‘JCMGM?$($?;~$N3F%K%e!<%m%s(#1 !A#4)$NF~=PNOG"$k!#2#<4$C%9%F%C%W!"=D<4$CF~NO!&PNO$NCMG"$k!#E~NO$rE@@~!"=PNO$r<B@~$G<(7F$"$k!#

?^34 $N#1 $N%0%i%U$K<(7?h&$K!":#2s;~4VO"B3>uBV5!3#$r3X=,5;$?%j%+%l%s%H%M%C%H$O;~4VO"B3$JF~NO$r=hM}G-$k!#$=3G0J2<!"3Nh&$J;~4VO"B3>uBV5!3#$NF0:n$,$INh$&$K<B8=5l$F$$k$+$r!"<B8=7?%j%+%l%s%H%M%C%H$N1#$l%K%e!<%m%s$NF0:n$K4p$E$$F=RYF$$/!#

?^34 $N#1 $NF~=PNO$r9T$&:]$N1#$l%K%e!<%m%s(?^33 $N%$%s%G%C%/%9#2 !A#4)$NF~=PNO$r?^34 $N#2 !A#4 K=l>$l<($9!#3liN%0%i%U$r8+kHo+$kh&$K!"?^34 $N#1 Nh$&$K;~4VO"B3$J=PNO$r9k$?aK!"%j%+%l%s%H%M%C%H$O3F%K%e!<%m%s$N=PNO$,I=$9;~4VO"B3E*$KJQ2=9kO"B3CM$N>uBV$rMxMQ7F$$k!#

5i$K!"3F1#$l%K%e!<%m%s$O!"F10l$NF~NOKBP7$F0[$J$k=PNO$r9T$&$3H,G-$F$$k!#3l$O!"A0@a$K$*$$FDL>o$N40A47k9g$N%j%+%l%s%H%M%C%H$K65;U6/@)$rMQ$$$?EBPTT Kh$k3X=,$r9TCF$b!"F10l$NF~NOKBP7F[Hs$IF1$8=PNOCM$r=P$7$F$$$?3H$HBP>HE*$G$"$k!#7?$,$C$F!"DL>o$N40A47k9g$N%j%+%l%s%H%M%C%H$K65;U6/@)$rMQ$$$?EBPTT Kh$k3X=,$G$O!"$$D$^$G$bFbIt>uBV$rMxMQ7?<1JL$,$G$-$kh&KJiJ$$N$KBP$7!"2f!9$NDs0F$7$?=PNO$NCYlrF~NO$K2s$7$?%j%+%l%s%H%M%C%H$GO=l,2DG=KJCF$$k$H8@$($k!#

Bh5 >O $*$ojK

%U%#!<%I%P%C%/!&k!<%W$r;}$D%K%e!<%i%k%M%C%HG"$k%j%+%l%s%H%M%C%H$O!";~7CNs>pJs$r=hM}$9k3H,G-$k!#$5iKO"B3CM$r07($k$?$a!"=>Mh$N8&5f$G$O%A%e!<%j%s%05!3#$hjbG=NO$,9b$/K|G=G"$kO"B3>uBV5!3#$H$$&5!3#%/%i%9$KJ,N`$5lF$-$?!#$=$N$?$a!"%j%+%l%s%H%M%C%H$O<+A38@8l$JIN5^6^$J1~MQJ,Ln$,9M$($ilk!#

0lJ}!"%j%+%l%s%H%M%C%H$O0lHL$K<B@$3&$K$*$1kh$&&J;~4VO"B3$JF~NO$r=hM}$9k3H,G-$k!#$=lK$b4X$oi:=>Mh$N%j%+%l%s%H%M%C%H8&5f$G$O!";~4V$N07$$,N%;6E*G"$C?!#

$=$3$G2f!9$O!";~4VJ}8~KbO"B3E*$J>uBV6u4V$H!";~4VJ}8~KbO"B3E*$J>uBVA+0\$r;}$DO"B3>uBV5!3#$r!";~4VO"B3>uBV5!3#$H8F$V3H$rDs>'$7$?!#$=7F!"3l$r%j%+%l%s%H%M%C%H$K3X=,5;$kJ}K!$rDs0F7?!#

$^$:%j%+%l%s%H%M%C%H$K;~4VO"B3>uBV5!3#$r3X=,5;$k:]$N%"%k%4%j%:%`$H$7$F!"BP $HF1MM$N:G5^9_2<K!$K4p$E$/%"%k%4%j%:%`N&$A!"87L)$JbN$hj7W;;NL!&a%b%jNL$HbK>/$J$$BPTT $rMQ$$$k3HKD$$F=RY?!#$=$7$F!"RTBPTT $HEBPTT $H$$&2DNBPTT %"%k%4%j%:%`N&$A!"%H%l!<%K%s%0!&Q%?!<%sA4BN$N8m:9$r:G>.2=G-$kEBPTT $r:NMQ$9k3HK$D$$F=RY?!#5i$K!"%j%+%l%s%H%M%C%H$N3X=,rh$jMF0W$K9k$?$a$K!"65;U6/@)$rMQ$$$k3HK7$?!#

$=$N$^$^GO%j%+%l%s%H%M%C%H$K3X=,$rE,MQ9k3H$,$G$-$J$$$M}M3H7$F!";~4VO"B3$JF~NOKBP7$F!"K>$^$7$$=PNO$,B8:_$9$kItJ,$HB8:_7J$$ItJ,$,$"k3Hr=RY?!#$=$7$F!"K>$^$7$$=PNO$,B8:_$9$kItJ,$N65;U?.9fN_$r3X=,A0$KDj5A7F$*$-!"K>$^$7$$=PNO$,B8:_$7$J$$ItJ,$N65;U?.9f$O!"3X=,CfK=$N;~9o$N%j%+%l%s%H%M%C%H$N=PNO$H0lCW5;k3HG!"K>$^$7$$=PNO$,B8:_$9$kItJ,$K1F6A$rM?$($J$$$h$&&K$9$k!"$H$$&2r7hK!rH$C?!#

$^$?!":NMQ9k%j%+%l%s%H%M%C%H$N%b%G%k$H7F!"==J,$J%K%e!<%m%s?t$r;}$D40A47k9g$N%j%+%l%s%H%M%C%H$rMQ$$$k3H$r=R$Y$?!#$3lO!"O@M}2sO)$,@_7WA0$KCJ?t$dO@M}AG;R$N8D?t$,$o$+$kNH$O0[$J$j!"EBPTT Nh$&&J:G5^9_2<K!$K4pE/3X=,%"%k%4%j%:%`K*1kF$O!"3X=,$N<}B+$K:GE,$J%j%+%l%s%H%M%C%HNAXNCJ?t$d!"%K%e!<%m%s?t$,;vA0Ko$+$i$J$$$+iG$"$k!#$=$N$?$a!"40A47k9g$N%j%+%l%s%H%M%C%H$rMQ$$$k3HKh$j!"G$0U$N9=B$$,Jq4^G-

k3HK$D$$F=RY?!#

5i$K!"=PNO$+$iF~NO$X$NCY1d;^$rF3F~9k3H$G!" %j%+%l%s%H%M%C%H $K F10l$NF~NOKBP7$F0[$J$k=PNO$r=P9h$&$K!"<1JL7d9/5;$kJ}K!$K$D$$ $F=R$Y$?!#$5iK!"3N;~$N65;U6/@)$rMQ$$$?3X=,J}K!KD$$$F$b=R$Y$?!#

0J>e$N7k2L$H7F!"$^$:DL>o$N40A47k9g$N %j%+%l%s%H%M%C%H $H=PNO$NCY$l $rF~NO$K2s7?%j%+%l%s%H%M%C%H $NN>J}$K65;U6/@)$rMQ$$$?;~$N3X=,$N7k2L $rHf3S$7!"8e<T$NM-8z@-$r<(7?!#$=$7$F!">e=R$N%"%W%m!<%A$K4p$E$-!"O"B3 E*$KJQ2=9kF~NOKBP7$F1bit-%b%8%e%m!&+%&%s%?$H7FF0:n9k%j%+%l%s %H%M%C%H$r3X=,$Khj<B8=$7!";~4VO"B3$KJQ2=9k>uBV>pJs$rMxMQ$9k3HK hG$F;~4VO"B3>uBV5!3#$r<B8=7F$$k3HKD$$F=RY?!#

<UK-

K\8&5f$N5!2q$rM?$($F2<5j!$E,@Z$J8f;XF3$r;r$oj^7?IYEDbC<#65<x$K?<?S$J<U0U$rI=$7$^$9!#

$^$?!"5.=E$J8f=u8@$r$$?$@$$$??9bC0lO:=u65<x!"CfEg9/I'=u65<x!"8^Eg@5M5=u<j!"DEM88x6G=u<j!";0NXG&;a!"1JLn5.@k;a$K?<$/46<UCW7^$9!#

5i$K!$F|:"CH$+$/8fJ\Z%2<5C$?5~ETBg3X9)3XIt>pJs3X2JIYED8&5f<<$N=t7;$K46<UCW7^$9!#

$"$j$,$H$&$4$6$$^7?!#

[1] Omlin, C. and Giles, C.: Extraction of rules from discrete-time recurrent neural networks, *Neural Networks*, Vol. 9, No. 1, pp. 41–52 (1996).

[2] McClelland, J. L., Cleeremans, A. and Servan-Schreiber: Parallel Distributed Processing: Bridging tha Gap between Human and Machine Intelligence, ?M9)CNG=3X2q;o, Vol. 5, No. 1, pp. 2–14 (1990).

[3] Cleeremans, A., Servan-Schreiber, D. and McClelland, J.: Finite state automata and simple recurrent networks, *Neural computation*, Vol. 1, No. 3, pp. 372–381 (1989).

[4] Copeland, B.J., S. R.: Beyond the Universal Turing Machine, *Australasian Journal of Physiology* (1998).

[5] Siegelmann, H.: Computation Beyond the Turing Limit, *Science*, Vol. 268, pp. 545–548 (1995).

[6] Stannett, M.: X-Machines and the Halting Problem: Building a Super-Turing Machine, *Formal Aspects of Computing*, Vol. 2, pp. 331–341 (1990).

[7] Rumelhart, D., G.E., H. and R.J., W.: Learning internal representation by error propagation, *Parallel Distributed Processing*, Vol. 1, pp. 318–362 (1986).

[8] Rumelhart, D., G.E., H. and R.J., W.: Learning representation by back-propagation errors, *Nature*, Vol. 323, pp. 533–536 (1986).

[9] Hava, T. and Eduardo, D.: Analog Computation via Neural Networks, *Theoretical Computer Science*, No. 131, pp. 331–360 (1994).

[10] Hava, T.: On the computational power of probabilistic and faulty neural networks., *Automata, Languages and Programming. 21st International Colloquium ICALP 94. Proceedings*, pp. 23–34 (1994).

[11] Elman, J.: Finding structure in time, *Cognitive Science*, Vol. 14, pp. 179–211 (1990).

[12] Servan-Schreiber, D., C. A. and McClelland, J.: Learning sequential structure in simple recurrent networks, No. CMU-CS-183 (1988).

[13] Kolmogorov, A.: On the representation of continuous functions of many variables by surposition of continuous functions of one variables and addi-

tion, *Dokl. Acad. Nauk USSR*, Vol. 114, pp. 956–956 (1956).

[14] Funabashi, K.: On the approximate realization of continuous mapping by neural networks, *Neural Networks*, Vol. 2, pp. 183–192 (1989).

[15] Williams, R. and Zipser, D.: Gradient-based learning algorithms for recurrent networks and their computational complexity, in Y. Chaubin and D.E. Rumelhart (eds.), *Backpropagation: Theory, Architectures, and Applications*, pp. 433–486 (1995).

[16] Williams, R. and Zipser, D.: A learning algorithm for continually running fully recurrent neural networks, *Neural computation*, Vol. 1, No. 2, pp. 270–280 (1989).

[17] DEED98<w, 1JLn5.@k, ;ONXG&, DEM88x6G, 8^Eg@5M5, IYEDbC<#: 3X=,Kh$kHs F14 |O"B3>uBV5!3#$N9=@., ?.3X5;Js CPSY2002–50 (SWoPP 2002), ?.3X2q, pp. 59–64 (2002).