=$;NO@J8

;~JQ%\%j%e!<%‘%G!<%?$N
<B;~4V2D;k2=N?aN
@lMQ%0%i%U%#C%/%9%+!<%I**VisA** $N3+H/

;XF3654 1 IYEDbC<#65<x

5~ETBg3XBg3X1!>pJs3X8&5f2J
=$;N2]DxDL?.>pJs%7%9%F%‘@196

@81@8x7<

J?@.15G/2 7n7F|

; ~JQ%\%j%e!<% '%G!<%?$N<B; ~4V2D; k2=$N$?$a$N
@lMQ%0%i%U%#%C%/%9%+!<%I**VisA** $N3+H/

@81@8x7<

FbMF9<35

6aG/$N7W; ;5!@-G=$N5^B.$J8~>e$KH<$$, Bg5,LO$+$D9b@:EY$J?tCM%7%_%e%l!<%7%g%s$X$N4|BT$,9b$^$C$F$$k. CfGb<B; ~4V$N?tCM%7%e%_%l!<%7%g%s$N2D; k2=5;=Q$O, Bg5,LO$J3<!85%G!<%?rI,MWH9k0eNEJINJ,LnK$*$$$F, 9bEY$J5;=Q$,MW5a5l$F$$kJ,LnG"$k.

2f!9O=Nh$&$JBg5,LO%G!<%?$N2D; k2=$r<B8=9kJBNs%\%j%e!<%'%l%s%@%j%s%04D6-$N9=C[$,L\I8G"$k!%Bg5,LO%G!<%?$N2D; k2=H7$F6qBNE*$K$O 4096^3 $N%\%j%e!<%'%G!<%?$r!$ 2048^2 $N%9%/%j!<%s$K30fps $G=PNO$9k3HrL\I8H9$k!%3$Nh&$JL\I8$G$O!$%7%_%e%l!<%7%g%s7O$+$i2D; k2=7OXN%\%j%e!<%'%G!<%?$NE>Aw; ~4V$,%\%H%k%M%C%/HJ$k!%

2f!9$O4D6-$N<B8=J}K!H7$F!$2D; k2=4D6-XN8&5f; q8;$NEj; qNL$K1~8FJ#?t$NJ}?K$r:vDj7F$$k$,!$K\9FGO$=$NFb!$2D; k2=@lMQ$N%O!<%I%&%'%"$rMQ$$$?<B8=J}K!KD$$$F=RYk!%

2f!9$O%7%_%e%l!<%7%g%s7O$+$i2D; k2=7O$X!$%M%C%H%o!<%/$rMQ$$$k3HJ/%\%j%e!<%'%G!<%?$N9bB.E>Aw9T$&$?$a!$PC %/%i%9%?$G%7%_%e%l!<%7%g%sEy$r<B9T$7!$PC Kh$KAuHw9k@lMQ%O!<%I%&%'%"$KD>@\%G!<%?E>Aw$9$kJ}<0$rHC$?!%

$^$?!$2D; k2=J}K!$H7F!$*ReVolver/C40 Nh$&$K%\%j%e!<%'%G!<%?$r3=E2=9kJ}<0$H3=E2=$r9T$oJJ}<0KD$$$FHf3S!$8!F$$r9TC?!%

K\9FGOOs0F9k%O!<%I%&%'%"(VisA) KD$$$F=RYkHHbK!$%\%j%e!<%'%G!<%?$,3FPC %/%i%9%?$K%5%$%/%j%C%/$KG[CV$5lF$$k>19g$N%\%j%e!<%'%l%s%@%j%s%0<jK!$d!$*Early Ray Termination $N8z2L$K$D$$$F=RYk!%

$=$N8e!$*VisA $N<gMWItJ,$G$"$k%T%/%;%kCM7W; ;ItJ,$N@_7W$r9T$$!$I>2A%\!<%I$K<BAu$r9T$C$?!%<BAu$K*$$$F$OXILINX <R$NVirtex-II %7%j!<%:$NFPGA $rMQ$$!$%a%b%j%b%8e!<%k$OPC2100 5,3JDDR-266 $r;HMQ$7$?!%Virtex-II $KAuHw$5lF$$k9bB.>h;;4o$d!$%V%m%C%/SelectRAM $r@Q6KE*$KMQ$$!$%T%/%;%kCM7W;;ItJ,$N:GE,2=$r?^$C$?!%=$N7k2L133MHz GNF0:n$r<B8=$5$;$?!%

:G8e$K!$2f!9$,:#2s:NMQ$7$J+$C$?2D; k2=J}<0$H!$5<;wF); kEj1FK!$K$D$$F$N9M;!$r9TC?!%

Developement of a Graphic Card "VisA" for Real-Time Visualization of Time-Varying Volume Data

Masahiro IKUMO

Abstract

Recently!$large-scale numerical simulation is coming to be done in the various fields!$caused by the rapid improvement of the computer performance!%Real-time visualization technology of numerical simulation is a field that demand advanced technology at a medical field where large scale three-demensional date should be necessary!%

Our goal is to built a parallel volume rendering environment to visualize such a large scale date set!%Our concrete goal is to visualize 4096^3 data set and output 30 frames per second in the screen of 2048^2 size!%In such a goal!$it becomes a bottleneck to transfer the large scale volume date from the simulation system to the visualization system!%

Now!$we are thinking about more than one policy!$corresponding to the amount of investment of the research resources to the visualization environment!% In this thesis!$I describe the way to raelize such environment by using a special hardware for the visualization!%

In our system!$volume data set is transferd at high speed without network from simulation system to visualization system!$bacause simulation is done at the PC cluster and volume data produced by the simulation is transfered to the special hardware which every PC is equipped with!%

In this thesis!$we describe special hardware "VisA"!$and volume rendering technique and the effect of Early Ray Termnation in the case that volume data is divided into circulation and assigned to each node!%

We designed pixel calculation units which are the main part of VisA!$and implement them on FPGA of the Virtex-II series of the XILINX!$Inc!%using PC2100 DDR-SDRAM266 as a memory module!%Finaly!$we optimized pixcel calculation units and raised movement frequency to 133MHz!%

Finaly!$we consider both visualization form which wasn't adopted this time!$ and perspective projection realized by using parallel projection!%

; ~JQ%\%j%e!<% '%G!<%?$N<B; ~4V2D; k2=$N$?$a$N

@lMQ%0%i%U%#%C%/%9%+!<%I**VisA** $N3+H/

L\<!

Bh**1** >O O8aK **1**

Bh**2** >O GX7J **3**

2.1 Revolver/C40 $N35MW 3

2.1.1 %\%j%e!<%'%l%s%@%j%s%0 3

2.1.2 *ReVolver*/C40 $NFCD' 3

2.2 <B; ~4V%$%s%?%i%/%F%#%V%7%e%_%l!<%7%g%s4D6- 7

2.2.1 %7%_%e%l!<%7%g%s$H2D; k2= 7

2.2.2 %j%"%k%?%$'2D; k2=%7%9%F%' 8

2.2.3 <B; ~4V%$%s%?%i%/%F%#%V%7%_%e%l!<%7%g%s4D6-$N9=@. J}<0 9

2.2.4 2f!9$N9=A[. 10

2.3 JBNs%\%j%e!<%'%l%s%@%j%s%04D6- 10

2.3.1 JBNs%\!<%'%l%s%@%j%s%0=hM} 10

2.3.2 3 DN%"%W%m!<%A 11

2.3.3 %=%U%H%&%'%"Kh$k2D; k2= 12

2.3.4 HFMQ3<!85%0%i%U%#%C%/%9%+!<%I$rMQ$$$?2D; k2= 13

2.3.5 @lMQ%O!<%I%&%'%"$rMQ$$$?2D; k2=. 14

Bh**3** >O @lMQ%O!<%I%&%'%"$rMQ$$$?2D; k2=%7%9%F%' **16**

3.1 %T%/%;%kCM7W; ; 16

3.1.1 ; k@~J}8~$,Ii$N>l9g 16

3.1.2 5U8~$-%T%/%;%kCM7W; ;2sO)$N:o8: 17

3.2 Early Ray Termination $N8z2L. 19

3.2.1 ERT HO. 19

3.2.2 BP>]H9$kJBNs%\%j%e!<%'%l%s%@%j%s%0%"%k%4%j:%' . 20

3.2.3 %5%$%/%j%C%/J,3d$K$*$1$kERT 20

3.2.4 8!>Z 21

3.2.5 9M; ! 23

3.2.6 K\%7%9%F%'XNE,MQ 24
3.3 2D;k2=J}K! 25
3.3.1 3=E2=$N7gE@ 25
3.3.2 %\%j%e!<%'%G!<%?$N3=E2=$r9ToJ$J}<0 26
3.3.3 N>J}<0$NHf3S 27
3.4 %7%9%F%'9=@. 29
Bh4 >O **VisA** $NFbIt@_7W **32**
4.1 VisA Pro $N9=@. 32
4.2 %\%j%e!<%'%a%b%j%"%/%;%9@)8f5!9=. 33
4.2.1 DDR SDRAM 34
4.2.2 %W%j%U%*%C%A$NL\E*!&MW5a;EMM. 34
4.2.3 %V%m%C%/C10L$N%W%j%U%*%C%A 34
4.2.4 9M;! 35
4.2.5 %"!<%S%? 36
4.2.6 %W%j%U%*%C%A$NF0:n. 36
4.2.7 ;k@~$N9-$,jKKh$kMxMQN($NDc2< 36
4.3 %T%/%;%kCM7W;;ItJ,$N@_7W 40
4.3.1 BRAM $H9bB.>h;;4o. 40
4.3.2 7W;;<0KD$$F$N9M;! 41
4.4 <BAu 42
4.4.1 PCU 42
4.4.2 Look up Table 44
4.4.3 %W%j%U%*%C%A%P%C%U%! 45
4.4.4 %N!<%I 47
4.4.5 8CJ%Q%$%W%i%$%s9=@. 47
4.4.6 F0:nB.EY$N9bB.2=. 49
4.4.7 VisA Pro XN3HD% 50
Bh5 >O 9M;! **52**
5.1 A4%\%j%e!<%'%G!<%?$N3=E2=$r7J$$>l9gKD$$F$N9M;! 52
5.2 5<;wF);kEj1F. 53
Bh6 >O $^$H$a **56**

<UK- 57

;29MJ88% 58

Bh1 >O O8aK

6aG/$N7W;;5!@-G=$N5^B.$J8~>e$KH<$$, Bg5,LO$+$D9b@:EY$J?tCM%7%_%e%l!<%7%g%s$X$N4|BT$,9b$^$C$F$$$k. CfGb<B;~4V$N?tCM%7%e%_%l!<%7%g%s$N2D;k2=5;=Q$O, Bg5,LO$J3<!85%G!<%?rI,MWH9k0eNEJI$NJ,Ln[5] K*$$$F, 9bEY$J5;=Q$,MW5a5l$F$$$kJ,LnG"$k. 3l$^Gb, PC %/%i%9%?Ey$NJBNs7W;;5!4D6-$rMxMQ7?, %7%e%_%l!<%7%g%sH=$N<B;~4V2D;k2=N?aN%7%9%F%`$,3+H/$5$l$F$-$?$,, <!@$Be$N%7%_%e%l!<%7%g%s5;=Q$H$7$F, =>Mh$N<B83$NBeBX<jCJ$H$J$j$&$k !2V>A[<B837?/2>A[BN837?$N%7%_%e%l!<%7%g%s4D6-!W$N9=C[$,K>$^$l$F$$$k. $3$3$G$O, %*%Z%l!<%?$K$h$k%7%_%e%l!<%7%g%sBP>]$X$N%$%s%?%i%/%F%#%V$JA`:n$KBP1~$7$F<B;~4V$G%7%_%e%l!<%7%g%s$r9T$&HHbK, B(9o$=$N7k2L$r2D;k2=$JIN<jCJKh$jDs<($9k3H,5aailF$$$k.

2f!9$O!$<B;~4V%$%s%?%i%/%F%#%V%7%_%e%l!<%7%g%s4D6-$N<B8=$K$`$1$F, 8D?M$"$k$$$O>.5,LO$JAH?%C10L$G@jM-MxMQ2DG=$JPC %/%i%9%?$rMQ$$$F, %$%s%?%i%/%F%#%V$J?tCM%7%_%e%l!<%7%g%s5ZS=$N2D;k2=[1]$r<B;~4V=hM}9k4D6-KD$$$F8&5f$r9T$C$F$$$k!%

2f!9$,L\;X$9<B;~4V%7%9%F%`$H$O!$KhIC30%U%l!<%`$N2hA|$rI,$:IA2h$7J/FOJi$J$$$H$$$C$?@)Ls$rK~$?$5lJ$$$H%7%9%F%`<+BN$,;_$^$C$F$7$^$&=j0b%O!<%I%j%"%k%?%$%`%7%9%F%`$G$O$J$$!%2f!9$O!$@)Ls$,K~$?$5$l$J$/$F$b2D;k2=%9%T!<%I$,CY$/$J$k$@$1$G!$%7%9%F%`<+BN$O;_$^iJ$$%=%U%H%j%"%k%?%$%`%7%9%F%`$rL\;X7F$$$k!%

2f!9$O!$JBNs%\%j%e!<%`%l%s%@%j%s%04D6-$N<B8=J}K!$H7F3DNB&LL$r9M$($F$$$k!%=hM}BP>]$K1~$8$F=hM}FbMF$r=@Fp$KJQ99$G$-!$=hM}$N9b5!G=2=$bMF0WG"$k%=%U%H%&%'%"$Khk<B8=!%Hf3SE*0B2A$K<j$KF~$k!$HFMQ%0%i%U%#%C%/%+!<%IKh$k<B8=!$5Z$SD69bB.$rL\;X7?@lMQ%O!<%I%&%'%"GN<B8=G"$k!%K\9F$OFPGA(Field Programmable Gate Array)$r;H$C$?2D;k2=@lMQ%O!<%I%&%'%"$N3+H/H=$N2D;k2=J}K!$K$D$$$F=RY?bNG"$k!%

K\9FGO, $^$:2>OK*$$$F8&5f$NGX7J$H7F2f!9$,8!F$$7$F$$$k<B;~4V%$%s%?%i%/%F%#%V%7%_%e%l!<%7%g%s4D6-$N9=A[$H, $=$3K*1k%7%_%e%l!<%7%g%s7k2L$N2D;k2=$r;Y1g9kJBNs%\%j%e!<%`%l%s%@%j%s%04D6-KD$$$F=RYk.

[1] 4096^3 $N8bit %\%j%e!<%`%G!<%?$rSHD 5,3JAjEv$N%9%/%j!<%s($2048^2$) $KIC4V30Kg$N%U%l!<%`%l!<%H$G=PNO9k2D;k2=%7%9%F%`$,EvLL$NL\I8G"$k.

3 >OGO2D;k2=@lMQ%0%i%U%#%C%/%9%+!<%IVisA(Visualiztion Accelerator) $r MxMQ$7$?%\%j%e!<%`%l%s%@%j%s%04D6-KD$$$F!$$=$N2D;k2=J}K!$dFCD'JI$r =R$Y!$VisA NHw(kY$-5!G=KD$$$F8!F$$9$k!%

4 >OGOFPGA $G6qBNE*$KVisA $r3+H/$9k?aNVisA Fb$N%b%8%e!<%k9=@. $d%G!<%?$NN.lK$D$$$F=RYk!%5 >OGO9M;!$r9T$$!$6 >O$G$^$Hak!%

Bh2>O GX7J

K\>OGO$^$:!$2f!9$,4{$K3+H/$7F-$?*ReVolver/C40*[1]$NFCD'KD$$F@b L@9k!%<!$K8=:_8&5f$7$F$$k<B;~4V%$%s%?%i%/%F%#%V%7%_%e&l!<%7%g%s4D6-$N9=@.J}<O!$5ZS=N?aN2D;k2=4D6-KD$$F=RYk!%:G8e$K<B;~4V2D;k2=$r<B8=9k$?$a$NJBNs%\%j%e!<%'%l%s%@%j%s%0%7%9%F%'4D6-KD$$F3DN;kE@$+$i=RYk!%

2.1 Revolver/C40 $N35MW

K\8&5f$NGX7J$H7F!$2f!9$O4{$K%\%j%e!<%'%l%s%@%j%s%0@lMQJBNs7W;;5!$N3+H/$r9TCF$*$j!$$=$N@.2L$H7F*ReVolver/C40*$H8F$V%W%m%H%?%$%W%O!<%I%&%'%"$r3+H/7=$NI>2A$r9TCF$-$?!%7+$7!$<!@a0J9_$G=R$Y$k<B;~4V%$%s%?%i%/%F%#%V%7%_%e&l!<%7%g%s$N2D;k2=$Nh&$J%7%_%e&l!<%7%g%s7O$+$i2D;k2=7O$X$N%G!<%?:E>Aw$KBP9kMW5a$,87$7$$%7%9%F%'KOE,5J$$!%

7+$7<B;~4V2D;k2=$r<B8=9k*ReVolver/C40*$N%"!<%-%F%/%A%c$O!$?7%7%9%F%'$N9=C[K*$$F$bM-MQ$JbNG"kH9M$($k!%0J2<GO%\%j%e!<%'%l%s%@%j%s%0HO2?$+!$5Z$S*ReVolver/C40*$NFCD'KD$$F=RYk!%

2.1.1 %\%j%e!<%'%l%s%@%j%s%0

%\%j%e!<%'%l%s%@%j%s%0$O!"%\%j%e!<%'6u4V$+$i5!<%U%'$$9$r;;=P$7$F%l%s%@%j%s%0$r9T$&5!<%U%'$$9%l%s%@%j%s%0HOO[Jj!"%\%j%e!<%'$N?'$dF)L@EY$rD>@\%9%/%j!<%s$K<M1F9k<jK!G"$k.%\%j%e!<%'%l%s%@%j%s%0$K$*$$F!"2D;k2=$NBP>]$HJk6u4V$r%\%j%e!<%'6u4V$H8F$V!#%\%j%e!<%'6u4V$K$O!"2J3X5;=Q7W;;$N7k2L$dk<+A38=>]$JIN%G!<%?;%C%H$,H>F)L@$N%\%j%e!<%'H7$F?'$dF)L@EYJI$KJQ49$5lFCV$+$l$k!#

*ReVolver/C40*GO!"%\%j%e!<%'6u4V$ON)J}BN$G$"$j!"$"$kD:E@$r4^$`3JU$,%o!<%k%I:BI87O$K$*$1$k3F:BI8<4 (x,y,z < 4)$N@5$NJ}8~$K$"$kh&$K@_Dj$5lk!#3N%\%j%e!<%'6u4V$rC10IN)J}BN$KJ,3d$7!"N%;6E*$K%G!<%?M?$($?bN$r%\%/%;%k$H8F$S!"3F%\%/%;%k$K$O?'$dF)L@EY$NCM(%\%/%;%kCM)$,M?$($ilk!#$^$?!"9%/%j!<%s$O%T%/%;%k$H8FPl$kC10L@5J}7A$N=89gH7$FB*$(il$k!#

2.1.2 *ReVolver*/C40 $NFCD'

*ReVolver/C40*$O!$0eNE2hA|@8@.$@$1GJ$/!$2J3X5;=Q7W;;$N2r@O$dN.BN$N2D;k2=$r$b9T$($k@lMQJBNs7W;;5!$G$"$k!%3NL\E*$rC#@.$9k?aK$O!$H>F)L@

ボリュームを不透明として扱う場合

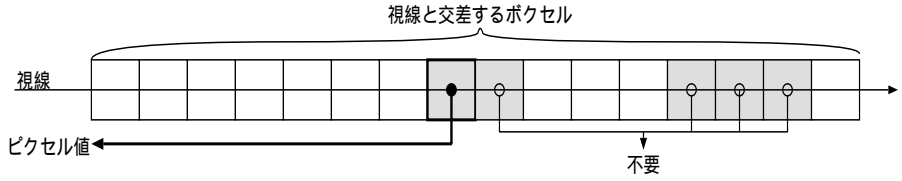

ボリュームを半透明として扱う場合

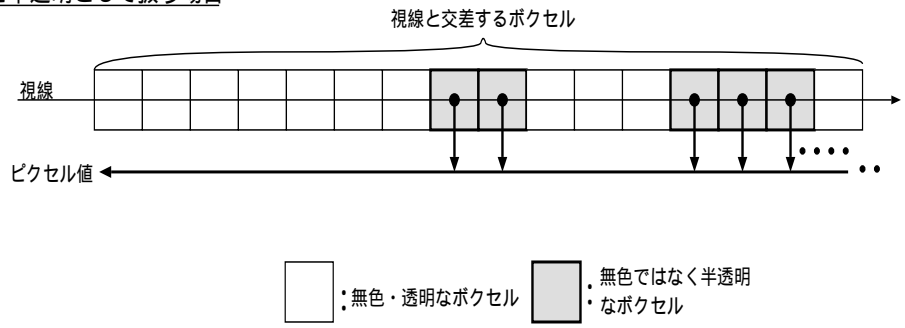

?^1: ;2>H9k%\%/%;%k$N0c$$

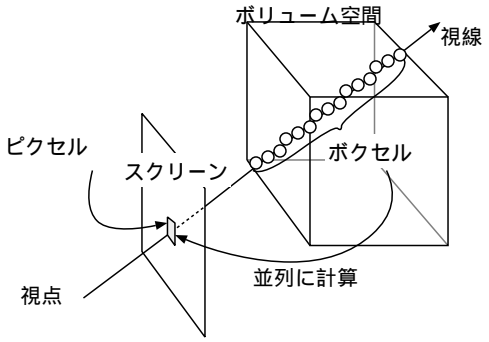

?^2: %l%$%-%c%9%F%#%s%0K!

%\%j%e!<% '$NI=< (!$1s6aK!Kh$k2hA|@8@.!$9bB.IA2h$H$$&3 DNMW7o$rK~B-$9kI,MW,$"$k!%%\%j%e!<% '$rH>F)L@$JbNH7$F07$&KO!$?^1 Nh$&$K%T%/%;%kCM$r7W;;9k:]$K;k@~$H8r:9$9$kL5?'F)L@GJ$$A4%\%/%;%k$r=g$K%"%/%;%9$9$kI,MW$,$"$k!%

$^$?1s6aK!$r:NMQ$9$k>l9g!$G$0UU}8~$N;k@~$,H/@8$9k?$a!$%a%b%j%"%/%;%9$,5,B'E*$GOJ$/!$%a%b%j%P%s%/XN%"%/%;%96%9g$N2DG=@-$,9b$/$J$j!$JBNs=hM}XN>c32HJ$k!%$3$3$G$O!$$=li$NLdBj$r2r7h$7!$9bB.IA2h$r9T$&$?$a$K*ReVolver/C40 $,;}$C$F$$kFCD'$r=R$Y$k!%

%l%$%-%c%9%F%#%s%0K!$N:NMQ ;kE@$+$i%9%/%j!<%s>eN"%k%T%/%;%k$NCf?4$X

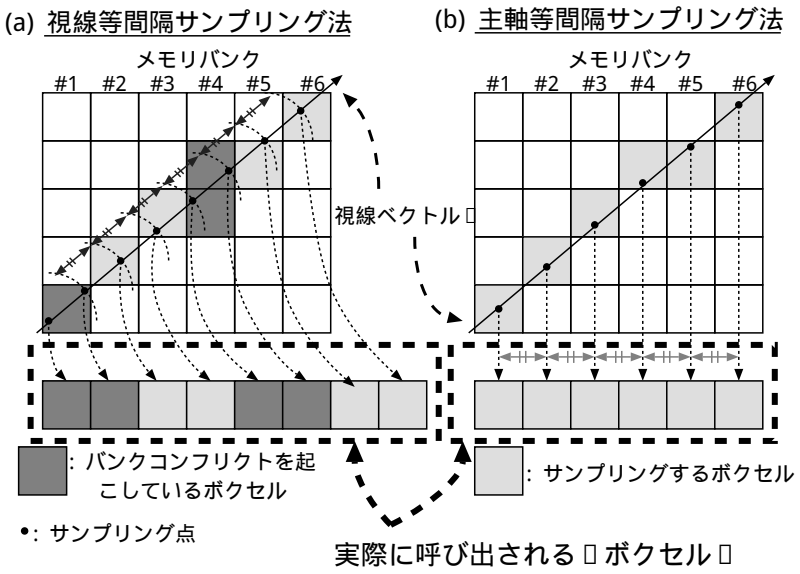

?^3: %5%s%W%j%s%0J}K!$N0c$$

$H8~$+$&%Y%/%H%k$N3H$r;k@~%Y%/%H%k$H8F$S!$;kE@$r0lC<$H$7%T%/%;%k$NCf?4rDLkH>D>@~$r;k@~$H8F$V!%?^2 $K<($9h&$K%l%$%-%c%9%F%#%s%0K!GO%9%/%j!<%s>e$N%T%/%;%k$4HK!$;k@~$,IN%\%/%;%k$rDL2a$7F-$?$N$+$rDI@W7F!$%T%/%;%k$N?'$dL@$k5r7hDj$7!$%9%/%j!<%s$KEj1F$9$k!%%l%$%H%l!<%7%s%0K!$HF1$89M$(J}$G$"$k$,!$H?<M$d6~@^$N3H$O9M$(JJ!%

%5%s%W%j%s%0J}K!$NC1=c2= =>Mh$N%5%s%W%j%s%0J}K!GO!$;k@~$NJ}8~KBP7$FEy4V3V$K%\%/%;%k$r%5%s%W%j%s%0$7F-$?!%$3$NJ}K!$r;k@~Ey4V3V%5%s%W%j%s%0K!$H8F$V!%

ReVolver/C40 GO!$;k@~%Y%/%H%k$N@.J,$N@dBPCM$N$&$A!$:GBgCM$rbD:BI8<4$r<g<4$HDj$a!$$3$N<g<4$NJ}8~KBP7$FEy4V3V$K%\%/%;%k$r%5%s%W%j%s%0$9$kJ}K!$r:NMQ7F$$k!%3NJ}K!$r<g<4Ey4V3V%5%s%W%j%s%0K!$H8F$V(?^3(b);2>H)!%3NJ}K!Kh$j!$<!$K=R$Y$k%P%s%/%3%s%U%j%/%H$,@8$8$J$!%

$?$@3NJ}K!GO!$;k@~$,<4$HJ?9T$GJ;;~$K%5%s%W%j%s%04V3V$,=>Mh$N;k@~Ey4V3V%5%s%W%j%s%0K!(?^3(a);2>H)HHfYFBg-$/$JkH$$$&@-<A$,$"$k!%$3$N%5%s%W%j%s%04V3V$NJd@5$O%T%/%;%kCM$N7W;;~$K9T$&3H$GBP=h$9$k!%

%P%s%/%3%s%U%j%/%HNJbj9=@. <g<4Ey4V3V%5%s%W%j%s%0K!GO!$$"$k

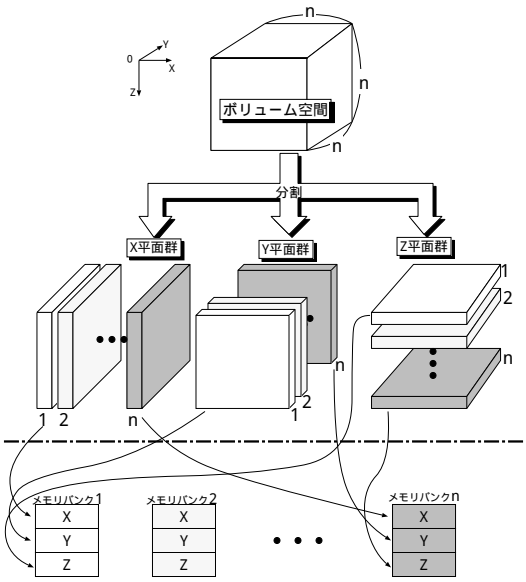

?^4: %\%j%e!<%`%G!<%?$N3JG<J}K!

:BI8<4$K?bD>$Jslice $K%\%j%e!<%`%G!<%?$rJ,3d7F%a%b%j%P%s%/$K3JG<$9lP!$$=$N:BI8<4$r<g<4H7$F;}$D;k@~$K4X$7FO%P%s%/%3%s%U%j%/%H%U%j!<HJ$k!%$7$+$7!G0UJ}8~$N;k@~$N<g<4$,!$$3$N:BI8<4$r<g<4H7$F;}$DHO8BiJ$$!%$=$3$G!$x,y,z<4$N$$:lK$b?bD>$Jslice $,B8:_$9kh$&$KJ,3d9lPG0UJ}8~$N;k@~$KBP7F%P%s%/%3%s%U%j%/%H%U%j!<H9k3H,G-$k!%

ReVolver/C40 $N3<!85%a%b%j9=B$$G$O!$?^4 Nh$&$K3FJ?LL72KBP7$F!$J?LL$K1,2,$\cdots$,n $HHV9f$rIU$1!$F1$8HV9f$r;}$DJ?LL$N%G!<%?r=$NHV9f$N%a%b%j%P%s%/$NBP1~$9$kNN0h$K3JG<9k!%9JoA!$%\%j%e!<%`b$N:BI8(p,q,r) $N%\%/%;%k$O!$%a%b%j%P%s%/p $NX NN0h!$%a%b%j%P%s%/q $NY NN0h!$%a%b%j%P%s%/r $NZ NN0h$N3 2U=j$K3JG<$5$l$k$N$G!$%\%j%e!<%`%G!<%?$r;0=E2=$7!$3JG<5lk3HKJj!$<g<4Ey4V3V%5%s%W%j%s%0$r9T$&$3HKhj!$;k@~$,G$0UJ}8~$G$"$CFb!$%P%s%/%3%s%U%j%/%H$,@8$8$J$$$3HrJ]>Z9k!%

%T%/%;%kCM7W;;=hM}GNUBNs=hM} 0lDN;k@~KBP9$k%\%/%;%kJBNs$N%T%/%;%kCM7W;;=hM}$O0l<!85$N%Q%$%W%i%$%s9=@.rHk3HKhCF=$N=hM}$rJBNs2=9k3H$,2DG=$G$"$k!%$=$l$>$l$N%W%m%;%C%5$O;kE@$K6a$$%\%/%;%k$+$i=g$K%T%/%;%kCM$r7W;;$7!$<+J,$N=hM}$,=*ok$H<!$N%W%m%;%C%5$K

7W;;7k2LrEO9!%%W%m%H%?%$%W$G$O%W%m%;%C%5$O128Bf!$:G=*9=@.$N%U%k%7%9%F%‘GO512Bf;HMQ9k!%

F);kEj1F *ReVolver/C40* GOEj1FK!H7$FJB9TEj1F$@1GJ/!$Ej;qEj1F$b%5%]!<%H7F$$k!%

- JB9TEj1F

  ;kE@$rL58B1s$K$*$/3H$G!$;k@~$r0lJ}9T$K8GDj7?Ej1FK!!%3NJ}K!$OHs>o$K%"%k%4%j%:%‘$,4JC1$G$"$j!$7W;;NL$b>/$J$$$H$$$&MxE@$,$"k,F1$8Bg$-5NJ*BN$,0[$J$k5wN%$K$"$CFbF1$8Bg$-5K8+$($F7^$&$H$$$&7gE@$,$"$k!%F);kEj1F$Nh&$KJ*BN$,ODsG8+$(?$jO7$J$$!%

- F);kEj1F

  ;kE@$+$i;k@~$rJ|<M@~>u$K=P$9Ej1FK!$G!$5wN%$,0[Jk$HF1$8Bg$-$5$NJ*BN$,$r0[$JkBg-5G@5$7$/8+k3H,G-$k!%$7$+$7!$;k@~$NCf?4$+$i30lk$H!$J*BN$N7A$,OD$‘7gE@$b$"$k!%

F);kEj1F$GIA2h$7$?$[$&$,?M4V$,8+$k$?$aKO<+A3$J2hA|$KJk!%7+$7!$JB9TEj1F9k>l9gON;k@~%Y%/%H%k$,A4$FF1$8J}8~$G$"$kNKBP7F!$F);kEj1F$G$OA4$F$N;k@~%Y%/%H%k$,0c$&%Y%/%H%k$G$"$k$?$a;k@~@8@.N?aN7W;;NL$,B?$/JCF7$^$$!$IA2hB.EY$NLL$+$i9M$($k$HITMx$G$"$k!%

2.2 <B;~4V%$%s%?%i%/%F%#%V%7%e%_%l!<%7%g%s4D6-

K\@aGO$^$:!$%7%_%e%l!<%7%g%s$H2D;k2=$N4X78$K$D$$$F=R$Y!$<B;~4V%$%s%?%i%/%F%#%V%7%_%e%l!<%7%g%s4D6-$r9=C[$9kK$"$?jI,MWHJk%j%"%k%?%$%‘2D;k2=%7%9%F%‘$K$D$$$F=RYk!%

2.2.1 %7%_%e%l!<%7%g%s$H2D;k2=

DL>o$N%7%_%e%l!<%7%g%s$G$O!$=i4|>uBV$H$$$/D+$N%Q%i%a!<%?$r%7%_%e%l!<%7%g%s$r3+;O$9$kA0$K@_Dj7=$N%Q%i%a!<%?$r%7%_%e%l!<%7%g%s$NESCf$GJQ99$9$k3H$O6K$a$F5)$G$"$k!%7+$7!$0eNEJ,LnGI,MWH5l$F$$k?(?GJI$N%$%s%?%i%/%F%#%V$J%7%_%e%l!<%7%g%s$G$O!$7W;;ESCf$K<B83<T$NH=CGKhCF!$%Q%i%a!<%?$rJQ99$9$k3H$,$7P7$P5/$3$j(%$%s%?%i%/%F%#%V@-)!$$=lKH<CF2D;k2=%7%9%F%‘B&GO=Nh$&$J;~!99o!9HJQo$k>u67$r<B;~4V$G2D;k2=$7J/FOJi$J$$!%

$^$?!$%$%s%?%i%/%F%#%V@-NJ$$%7%_%e%l!<%7%g%sK*$$F$b=i4|%Q%i%a!<

%?$N@_Dj%_%9$JINh&$J>/$77W;;$r?J$alP$9$0J,$+$k%_%9$b!$$3l^GN
2D;k2=%7%9%F%`GO7W;;=*N;$^$GBI$?$J1l$PJ,$+iJ$+$C$?!%

<B:]!$$3l^GN%7%9%F%`$O!$%7%_%e&l!<%7%g&s$N:G=*7k2L$N2D;k2=!$CT%9
%-%c&s$N4QB,7k2L$N2D;k2=JI!$7k2L$N2D;k2=$K<g4c$,CV$+$l$F$$$?!%$=$N$?
$a!$2D;k2=$r9T$&ItJ,$H2D;k2=BP>]$HJk%G!<%?$r@8@.$9$kItJ,$H$,$OC-$j
J,1ilF$*$j!$7W;;%5!<%P$JIN%G!<%?@8@.7O$G9T$C$?7W;;$N:G=*7k2L$r%M%C
%H%o!<%/JI$G!$%0%i%U%#%C%/%9%o!<%/%9%F!<%7%g&s$d%Q%=%3%s$JIN2D;k2=@l
MQ%7%9%F%`$KE>Aw$7$F2D;k2=$9kbN,0lHIE*G"C?!%$^$?!$%G!<%?@8@.7O
$H2D;k2=7O$,JL$N%7%9%F%`$G$"$C$?$?a!$%7%_%e&l!<%7%g&sB&$N%G!<%?@7A<0$H2D
;k2=B&$N%G!<%?@7A<0$N8_49@-$d!$%7%9%F%`$NA`:n@-JI$NMM!9$JLdBj$,$"C?!%

0J>eNh$&$JE@$+$i9M$($k$H!$<B;~4V%$%s%?%i%/%F%#%V%7%_%e&l!<%7%g&s4D
6-$r9=C[$9k?aKO!$4QB,$d7W;;r=$N;~!9$G%j%"%k%?%`$K2D;k2=$9$k2D
;k2=%7%9%F%`$,I,MWIT2D7g$G$"$k$H$$($k!%

2.2.2 %j%"%k%?%`2D;k2=%7%9%F%`

K\9`$G$O!$%j%"%k%?%`2D;k2=%7%9%F%`$NMxMQ7ABV$r=R$Y!$$=l>lKI,MW
HJ$k;EMM$r=RYk!%

%j%"%k%?%`2D;k2=%7%9%F%`$NMxMQ7ABV$H7F$O!$%7%_%e&l!<%7%g&s$N:G=*
7k2LNh$&&$J@EE*$J%\%j%e!<%`$G!<%?2D;k2=(0J8e!¥*%U%i%$%s2D;k2=!W$H8F
$V)$H%7%_%e&l!<%7%g&s$NESCf7P2a$JIN;~JQ$J%\%j%e!<%`$G!<%?2D;k2=(0J8e
!¥*%s%i%$%s2D;k2=!W$H8F$V)$,$"$k!%0J2<GO!$%*%s%i%$%s2D;k2=$H%*%U%i%$%s2D;k2=KD$$$F$b&>/$7>\$7$/=R$Y$k!%

- %*%U%i%$%s2D;k2=0eNE2hA|$N2r@C$d7%_%e&l!<%7%g&s$N:G=*7k2L$N2r@CEy!$2D;k2=$NBP>]$,;~ITJQ%\%j%e!<%`$G!<%?2D;k2=$G$"$k$b$NMxMQ7ABV$G$"$k!%%G!<%?@8@.7O$+$i2D;k2=7O$X$N2D;k2=BP>]%G!<%?$N<u$1EO$7$OIQHK$G$J$/!$N><T$,Hf3SE*AF$KO"7H$7$F$$k>19g$G$"$k!%%*%U%i%$%s2D;k2=$G$O!$BP>]$r2?EY$b2D;k2=$7$F2r@C$9$k$3$H$,9M$($i$l$k$N$G!$2D;k2=7O$C$G$-$k$@$19b@::Y$+$D9bB.$J2hA|@8@.$H%$%s%?%U%'!<%9$N<B;~4V1~Ez@-!$A`:n@-$,5a$ail$k!%$^$?!$"if$kJ}8~$+iN;kE@XNBP1~JI!$2D;k2=$N:]$N%Q%i%a!<%?$KBP9kMW5a$,9b$$!%
- %*%s%i%$%s2D;k2=?7$7$/I,MW$HJjDD"$k!$%7%_%e&l!<%7%g&s$NESCf7P2a$N2D;k2=JI!$2D

;k2=BP>]$,;~JQ%\%j%e!<%'%G!<%?$N>l9g$NMxMQ7ABV$G$"$k!%3$N>l9g!$%G!<%?@8@.7O$+$i2D;k2=7OXN2D;k2=BP>]%G!<%?$N<uEO$7$,IQHK$K5/3k!%$=$N$?$a%*%s%i%$%s2D;k2=$G$O!$$G$-$k$@$l9bB.$J2D;k2=BP>]%G!<%?$N<uEO7,5aailk$?$a!$%G!<%?@8@.7O$H2D;k2=7OHN4V$N@\B3$K$O9b$$@-G=$,5a$ail$k!%

$^$?!$%*%U%i%$%s2D;k2=Nh$&$KF1$8%G!<%?$r2?EY$b2D;k2=$7$F!$2r@O9k3Hb"k?$a!$$=lKBP1~G-$k9bB.$JIA2hbI,MWG$"$k!%$^$?!$;kE@$r0\F0$5$;J,$iESCf7P2a$N4QB,JIO"$^$j9M$($ilJ$$$N$G!$2D;k2=$N:]$N%Q%i%a!<%?KBP9$kMW5a$CDc$$!%

0J>ehj!$$3li2DNMxMQ7ABV$KBP1~$9k?aK$O<B;~4V2D;k2=$,2DG=$J9bB.$J2hA|@8@.$K2C$($F!$%G!<%?@8@.7O$+$i2D;k2=7OXN9bB.$J%G!<%?$N<u$1EO$7$,=EMW$G$"$k$H$$$($k!%

2.2.3 <B;~4V%$%s%?%i%/%F%#%V%7%_%e%l!<%7%g%s4D6-$N9=@.J}<0

3l$^$G$N5DO@$h$j2D;k2=7O$H%G!<%?@8@.7O$NO"7H$,=EMWG"k3H,J,$+$C$?!%%7%9%F%'9=@.$H7F$OJ2<$NJ}K!$,9M$(il$k!%

J}<01 $^$:9M$($ilkN,!$$3l^GN2D;k2=%7%9%F%'$HF1$8h&$K!$7W;;%5!<%P$K%G!<%?@8@.7O$rCV$-$=lHOJLK2D;k2=@lMQ$N%0%i%U%#%/%9%o!<%/%F!<%7%g%sNh$&$JJ}bN$r@_$1$=$3$K2D;k2=7O$rCV$/J}<0$G$"$k!%

3Nh&$JJ}<0$G$O!$2D;k2=7O$r@lMQ$K@_1k$?$a!$%*%U%i%$%s2D;k2=$G5a$ail$k2D;k2=7O$N@-G=$rK~$?$9$3HOMF0WG"k,!$%*%s%i%$%s2D;k2=$G5a$ail$k%G!<%?@8@.7O$H2D;k2=7OHN4V$N@\B3$KBP9k@-G=$rK~$?9?aK$O!$Fq7/Jk!%

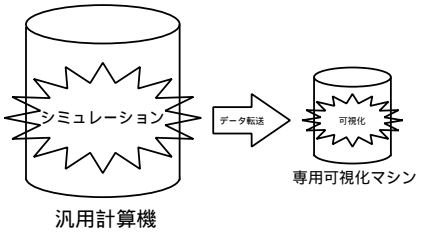

?^5: J}?K1

J}<02 %*%U%i%$%s2D;k2=$G5aailk%G!<%?@8@.7O$H2D;k2=7O$H$N4V$N@\B3KBP9$k@-G=$rK~$?$9$?$aKO!$%G!<%?@8@.7O$rJL!9$K@_$1kN$G

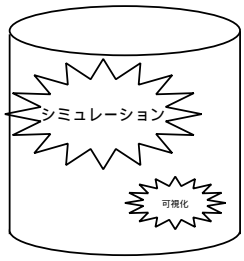

?^6: J}?K2

OJ$/!$Nc$($PF1$8HFMQ$NBg7?7W;;5!Fb$K@_$1kH$$G$?J}<0$b9M$($ilk!%

3NJ}<0GO!$N><T$N@\B3KBP9$k@-G=$OMF0W$KK~$?$9$3H,G-k,!$2D;k2=$KFC2=7?%7%9%F%`GO$J$$$?$a!$2D;k2=7O$N@-G=$rK~$?$9$3$H$,LdBj$HJk!%

2.2.4 2f!9$N9=A[

%7%9%F%`$N9=@.J}?K$H$7$F$O!$2.2.3 $G=R$Y$?$N$h$&$K2D;k2=7O$H%G!<%?@8@.7O$rJ,$1$kJ}K!(J}?K1) $H0lBN$H$9$kJ}K!(J}?K2) $,$"$k!%2f!9$O!$4096^3 $N%G!<%?$r2048^2 $N%9%/%j!<%s$K30fps $GI=<($9$k$3$H$rL\I8$H$7$F$$$k!%%\%j%e!<%`%l%s%@%j%s%0GO!$#1$D$N%\%j%e!<%`%G!<%?Ev$j$NLi;;NL$OHf3SE*>/$J$/!$IA2hB.EY$r;YG[$9$k$N$O%\%j%e!<%`%G!<%?$X$N"%/%;%9%P%s%II}$H9M$($FNI$$!%>e5-$NL\I8$rC#@.9k$?$a,MWHJ$k%a%b%j%P%s%II}$O480GB/sec HJ$k!%%\%j%e!<%`%G!<%?$NE>Aw$K4X$7$F9M$($?>19g!$J}<02 Nh$&$K%G!<%?@8@.7O$H2D;k2=7O$r0lBNH9$k"%W%m!<%A$rHkY-G"$k!%

$=$3$G2f!9$OPC %/%i%9%?$r%7%_%e%l!<%7%g%sJ}BN$H$7!$$=3G@8@.5l$k%\%j%e!<%`%G!<%?$rPC %/%i%9%?Fb$G2D;k2=$9k3HG%a%b%j%P%s%II}$NMW5a$rK~$?$7!$>e5-$NL\I8$rC#@.$9k3Hr9M$($k!%

2.3 JBNs%\%j%e!<%`%l%s%@%j%s%04D6-

K\@aGOJBNs%\%j%e!<%`%l%s%@%j%s%0=hM}$K$D$$F=R$Y!"JBNs%\%j%e!<%`%l%s%@%j%s%0=hM}$r<B8=$9$kJ}K!$H7F3 DN;kE@$+$i9M$($k!#

2.3.1 JBNs%\!<%`%l%s%@%j%s%0=hM}

Bg5,LO%7%_%e%l!<%7%g%s7k2L5ZS=$N2aDx$N2D;k2=K*$$F$O, JBNs7W;;5!$N3F%N!<%I$G@8@.$5l?KDBg$J%G!<%?$r, 0lC6<}=8$7$?8e$K2D;k2=$9kH$$$C$?=>Mh$N2D;k2=<j=gGO<B;~4V@-$N3NJ]$,:FG$"$k. 7?$,$C$F, <B;~4V2D;k

2=$r<B8=$9k?aK$O, @8@.$5l?%G!<%?KBP7$F, $=$N%N!<%I$,2D; k2=$KI,MW $J=hM}$r9T$$, :GDc8B$N>pJs$N$_$rA4%N!<%I$+$i<}=8!?=hM}7F%f!<%6$KDh<(9k; EAH$_$,I,?\$G$"$k. 0J2<GO, 3<!85%G!<%?$N2D; k2=<jCJ$N#1DG$"$k%\ %j%e!<% `%l%s%@%j%s%0=hM}$rBP>]$H$7$F2D; k2=%7%9%F% `$N<B8=J}K!$K$D$$F8! F$$9$k.

%\%j%e!<% `%l%s%@%j%s%0GO!$%7%_%e%l!<%7%g%s$KhjF@il$?3<!856u4V >e$N?tCM%G!<%?$r, ?'C $HF)L@EYt $KBP1~$E1k3H$G, 3<!856u4VFbIt$N%G!< %?$NJ,I[>u67$r2D; k2=9k. 6qBNE*KO, $^$:; kE@$+$i%9%/%j!<%s$N3F%T%/%; %k KBP7$F; k@~$r=P$7!"; k@~>e$N%\%/%; %kNCMr; kE@$K6a$$=gKv_o, v_1, v_2, !DH9 kH%T%/%; %kCM$O<!$N<0 !ЭV$_9~$_1i; ;!K$G7W; ;$5lk!%

$$C_k = \sum_{i=0}^{k} (1 - t(v_i)) \cdot c(v_i) \cdot \prod_{j=0}^{i-1} t(v_j) \tag{1}$$

$$T_k = \prod_{i=0}^{k} t(v_i) \tag{2}$$

$3$3$Gc(v_i), t(v_i) O=l>$l%\%/%; %kCMv_i $r!$?'!$F)L@EY$KJQ49$7$?CMG"$k 3H$r<(7F$$$k!%5i$K!$<0(1)!$(2) $O0J2<$Nh&$JA22=<0$KJQ49G-$k!#

$$C_k = C_{k-1} + (1 - t(v_i)) \cdot c(v_k) \cdot T_{k-1} \tag{3}$$

$$T_k = t(v_k) \cdot T_{k-1} \tag{4}$$

3N>v$_9~$_1i; ;KO!"1i; ;6h4V$r$$$/D+$NItJ, 6h4V$KJ, 3d$7, $=$l$>$l $N6h4V$KBP9k7W; ;7k2LKBP7$F, :FEY>v$_9~$_1i; ;$r9T$&$3HG7k2L$rF@$k 3H$, 2DG=$G$"$k$H$$$&@-<A$, $"$k. $=$3$G, 1)%7%_%e%l!<%7%g%s%5!<%P$N3F %N!<%I$, <+?H$, @8@.$7$?%G!<%?$KBP9kItJ, 3<!856u4V !ØJ2<%5%V%\%j%e!< % `$H8F$V!KKBP7$F>v$_9~$_1i; ;$r9T$$, 2)$=$3$GF@$il?2hA|$H%\%/%; %kKh $NF)L@EY$r, ; kE@$+$i$N5wN%$N=gHV$K=>$C$F9g@.$9$k, $H$$$&<jK!$GJBNs=hM}$, 2DG=G"$k.

2.3.2 3 DN%"%W%m!<%A

3Nh&$J%\%j%e!<% `%l%s%@%j%s%0=hM}$N<BAu$K:]7F$O, 2D; k2==hM}$KBP$7 FIl@1NEj; q$, 2DG=$+$K1~8F, $$$/D+$NJ}K!$, 9M$($ilk!#$^$:!"2D; k 2=MQ$N%O!<%I&%′%"!&"%/%; %i%l!<%?$rMQ$$$k$+!"MQ$$:$K%=%U%H&%′%"$N$_$G 9T$&$+$H$$$&A*Br$, $"$k!#$^$?!"%O!<%I&%′%"; Y1g$r9T$&>19gK*$$F$b!"%F

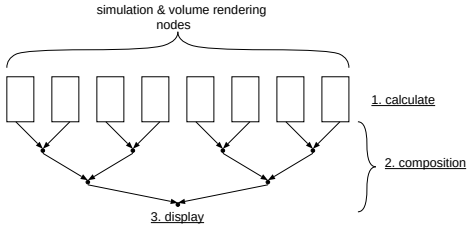

?^7: JBNs%\%j%e!<%`%l%s%@%j%s%0=hM}$N35N,

%/%9%A%&Y!<%9$N%\%j%e!<%`%l%s%@%j%s%0(Texture Based Volume Rendering) $r9T$&HFMQ%0%i%U%#%C%/%9%+!<%I$rMQ$$$k$+,$"$k$$OD>@\%\%j%e!<%`%l%s%@%j%s%0(Direct Volume Rendering) $r9T$&%\%j%e!<%`%l%s%@%j%s%0@lMQ$N%O!<%I%&%'%"$r<BAu9k$+$NA*Br$,2DG=$G$"$k. 2f!9$O,$3$N$$:lN%1!<%9BP7F$bBP1~2DG=$J2D;k2=;Y1g4D6-$N9=C[$rL\;X7F$$k.

0J2<!"%=%U%H%&%'%"$rMQ$$$k>l9g$H!"HFMQ%0%i%U%#%C%/%9%+!<%I$rMQ$$$k>l9gKD$$F4JC1$K=R$Y!"$=$N8e!"K\9F$N<gBj$G$"$k@lMQ%O!<%I%&%'%"$rMQ$$$k$?2D;k2=%7%9%F%`$K$D$$F4XO"8&5f$r5s$2J,$i=R$Y$k!#

2.3.3 %=%U%H%&%'%"Kh$k2D;k2=

%=%U%H%&%'%"Kh$kJ}K!$G$O,%7%_%&l!<%7%g%s$KMQ$$$?%W%m%;%C%5$r2D;k2==hM}$K$hMxMQ$9k?$a,2D;k2=$N$?$a$N?7$?$JEj;q$,I,MW$J$$H$$&MxE@$,$"k,,2D;k2==hM}$b%7%_%&l!<%7%g%s$bF10l$NCPU $G9T$olk$?$a!"2D;k2==hM}$r9T$C$F$$k4V$O,%7%_%&l!<%7%g%s$,;_CF7^$&$H$$&7gE@$,$"$k.

3F%N!<%I$G@8@.$7$?%5%V%\%j%e!<%`$KBP$9$kCf4V2hA|%G!<%?(?'!"5Z$SF)L@EY)$,$G$-$k$H,$3$l$r$b$H$K:G=*9g@.2hA|$r@8@.$9$k.B?$/$N>l9g,$3$N9g@.=hM}$O3F%N!<%I$,J];}$9$k%5%V%\%j%e!<%`4V$NNY@\4X78$K4p$E$/$2^N?JLZ9=B$$N9g@.%M%C%H%o!<%/$r9=@.$7$F%Q%$%W%i%$%sE*$K=hM}$r9T$&.%M%C%H%o!<%/<+BN$O%=%U%H%&%'%"$KhC$F9=@.$9k?$a!"=@Fp$J9=@.rHk3H,G-kH$$&MxE@$,$"$k!#

3F%N!<%IGN2D;k2==hM}K*$$F,;kE@,%9%/%j!<%s,%5%V%\%j%e!<%`$NAj8_$N0lCV4X78$r9MN8$7$?%-%&C%7%e!&V%m%C%-%s%0<jK!$rMQ$$$?:GE,2=,%9%H%j!<%_%s%0SIMD L?NaEy$r3hMQ$7$?:GE,2=,%-%&C%7%e&P%$%Q%9$d%W%j%U%'%C%AEy$N%a%b%j:GE,2=,$5$i$K$O,Shear-Warp[3],Aa4|;k@~=*C<(ERT)Ey$N%"%k%4%j%:%`%l%Y%k$N:GE,2=$r9T$&$3HG@lMQ$N%O!<%I%&%'%"$K;$^$k@-G=$r=P$9$3$HbIT2DG=GO$J$$.

%=%U%H%&%’%"Kh$k<jK!$G$O, %l%s%@%j%s%0=hM};~4V$,Bg$-$/Jk798~$,$"k,, $=$NH?LL, Hs6Q<A9=B$3J;R$X$NBP1~Ey$N=@Fp$J=hM}$,2DG=G"$k. $?$@$7, 3N>l9g$O2D;k2=%Q%i%a!<%?$K0MB8$7$?Ii2YIT6Q9U$r2r>C$9k?aNF0E*Ii2YJ,;6=hM}Ey$,I,MW$KJk[6].

2.3.4 HFMQ3<!85%0%i%U%#%C%/%9%+!<%I$rMQ$$$?2D;k2=

%=%U%H%&%’%"Kh$kJBNs%\%j%e!<%‘%l%s%@%j%s%0K*$$F, 7W;;%5!<%P$N3F%N!<%I$N%W%m%;%C%5$,C4Ev$7$F$$?%5%V%\%j%e!<%‘KBP9$k%l%s%@%j%s%0=hM}$r, HFMQ$N3<!85%3%s%T%e!<%?%0%i%U%#%C%/%9%+!<%I(3DCG%+!<%I)$K9T$o$;,3DCG%+!<%I$N%O!<%I%&%’%"%"%/%;%i%l!<%7%g%s5!G=$r3hMQ$7$F9bB.2=$r?^$kJ}K!$G$"$k.

$3$3GO!$%\%j%e!<%‘6u4V$r:BI8<4$K?bD>$J%9%i%$%9$N=E$M9g$o$;$GI=8=$7,$=li$rH>F)L@%F%/%9%A%c$H7F%]%j4%s$K%^%C%T%s%0$7$?$bNr&A%V%l%s%G%#%s%0$9$k3HKhCF%\%j%e!<%‘%l%s%@%j%s%0=hM}$r9T$&[7].

3DCG%+!<%I$,%l%s%@%j%s%08e!$2.3.3>O$HF1MM$K8D!9$N%l%s%@%j%s%07k2L$r%M%C%H%o!<%/$r2p$7$F9g@.$9$k. 0lHL$K3DCG%+!<%I<+?.$ODL?.5!G=$r;}$?$J$$$?$a,9g@.$N$?$a$N%N!<%I4VDL?.$K$*$$F$O,7W;;%5!<%P$NCPU$r2p$7$?=hM}$,I,MWHJ$k.

8=:_,HFMQ3DCG%+!<%I$N%0%i%U%#%C%/%9%a%b%j%5%$:$O9b!9l128MB DxEY$G$"$j,%5%V%\%j%e!<%‘%5%$:$hjbOk$+$K>.$5$$H$$&3H$,9M$(il$k. $^$?,%F%/%9%A%c%5%$:$N>e8B$,%\%j%e!<%‘%9%i%$%9$N%5%$:hj>.$5$$$3Hb$"$jF@$k. 3Nh&$J>l9g,%N!<%IFb$N%l%s%@%j%s%0=hM}K*$$F%5%V%\%j%e!<%‘$r%5%V%5%V%\%j%e!<%‘$KJ,3d$7,$=lKBP7F%l%s%@%j%s%0$7$?8e$K7k2L$r9g@.7F,%5%V%\%j%e!<%‘KBP9$k%l%s%@%j%s%07k2L$rF@kH$$C$?=hM}$,I,MWHJ$k.

8=;~E@GO$^$@==J,$J9M;!$,9T$($F$$J$$,, Pentium4 $N2.2GHz!"<g5-21 512MB(PC800)!$3DCG%+!<%I GeForce4 Ti 4600 (Graphics Memory: 128MB) $rMQ$$F, $128 \times 128 \times 69$ $N%\%j%e!<%‘%G!<%?$KBP7$F, 512^2 $N2hA|$r@8@.5;$?$H3m,%G!<%?E>Aw;~4V$r=|$/%\%j%e!<%‘%l%s%@%j%s%0=hM}$K30.01msec rMW9k3H,J,$+CF$$k. $^$?,%G!<%?E>Aw$K4X$7FO!$%F%/%9%A%c%a%b%j$X$N=q$-9~$_[1]$KMW9k;~4V$O1MB $"$?$j1.84 msec $HAGP4X $N:GBgE>Aw@-G=

[1] OpenGL $NglTex3dImage() $rMxMQ

$K6a$$CM$r<($7$F$$$kNKBP$7!$%U%l!<%`%P%C%U%!$+$iNFI_=P$7[1]$d=q$-9~$_[2]KMW9$k;~4V$O,$=$l$>$l,1MB$"$?$j6.16msec$JiS$K82.02 msec$HDcB.G"k3H,J,$+$C$F$$$k[11].

2.3.5 @lMQ%O!<%I%&%'%"$rMQ$$$?2D;k2=

4000^3 DxEY$NBg5,LO$J3<!85%G!<%?$N2D;k2=$K$D$$$F9M$($k$H!"=>Mh$NAVSEy$KBeI=$5lkHFMQ7W;;5!$rMQ$$$?2D;k2=GO!";HMQ9k7W;;5!$N%a%b%j@-G=$N@)8B$+$i%j%"%k%?%$%`1~Ez@-$,Dc$$!"$b$7$/$OHs>o$KBg5,LO$JHFMQ7W;;5!$,I,MW$K$J$k$J$I!"@_CVLL@Q$@$1$r9M$($F$b%3%9%H%Q%U%)!<%^%s%9$KLdBj$,$"$k!#$^$?2f!9$N%7%9%F%`$NBP>]%f!<%6H7FO8&5f<<Nh$&$JC10L$r9M$(F*$j!"$3Nh$&$J%f!<%6$,!"HFMQ$NBg7?7W;;5!$r@jM-$9k3HOFq$7$$!#

2f!9$O2.2.4 @a$G=RY?h&$K!"PC%/%i%9%?$r%7%_%e%l!<%7%g%sJlBNH7$F!"PCI%P%9$K%\%j%e!<%`%l%s%@%j%s%0@lMQ$N%O!<%I%&%!%"$rIU2C7?9=@.rH$k!#

3Nh&$JPC%/%i%9%?$K@lMQ%O!<%I%&%'%"$rIU2C$9$kJ}<0$r:NMQ7F$$$k<BAuNcH7$F!"VGCluster$,$"$2il$k!#VGCLuster$G$O%\%j%e!<%`%l%s%@%j%s%0$NJBNs2=$N<jK!$H$7$F!"ReVolver/C40$N$h$&$J%Q%$%W%i%$%s$G%\%/%;%kJBNs=hM}$r9T$&$b$N$H$O0[$J$j!"0l$D$N;k@~$r%\%j%e!<%`JBNs=hM}$9$kJ}<0$r:NMQ7F$$$k!#

VGCluster$G$O!"PCI%+!<%I7?$N%\%j%e!<%`%l%s%@%j%s%0@lMQ%O!<%I%&%'%"$G$"$kVolumePro$rEk:\$7$?PC$GPC%/%i%9%?$r9=@.$7!"PC%/%i%9%?It$G%7%_%e%l!<%7%g%s$r<B9T$7!"2D;k2=$rVolumePro$rMQ$$$F9T$&!#VolumePro$O$512^3$N%G!<%?$r%j%"%k%?%$%`$G%\%j%e!<%`%l%s%@%j%s%0$r<B9T$G$-$k%O!<%I%&%'%"$G!"VGCluster$GO5iKBg5,LO$J%G!<%?$N2D;k2=$r!"3F%9%/%j!<%s$KBP9k=hM}r512^3$4$H$N%\%/%;%k$KJ,3d$7!"3FVolumePro$K3djEvF!":G=*7k2L$r#1$D$N%9%/%j!<%s$K=E$M9g$o$;$FI=<(9k3H$G<B8=$7$F$$$k!#VGCluster$G$O3N=E$M9g$o$;$N$?$a$N@lMQ%O!<%I%&%'%"$,I,MWKJCF$$$k!#

$^$?!"%a%b%j$NBgMFNL2=$N287C$r<u$1!"%o!<%/%9%F!<%7%g%s!&Q!<%=%J%k%3%s%T%e!<%?$N%"%I%*%s%\!<%I$H7F256^3 DxEY$N%\%j%e!<%`%G!<%?$N2D;k2=$9$k%7%9%F%`$O4{$K3+H/$,J5lF$$$k$,!"%j%"%k%?%$%`I=<($r$9$k:]$K$O;kE@$d;k3Q$J$I$K@)8B$,$"$k!#99$K!"$4000^3$ DxEY$NBg5,LO$J%\%j%e!<%`%G!<%?$r07$&KO%a%b%jMFNL!"%a%b%j%P%s%II}6&$KIT==J,$G$"$k!#

[1] OpenGL $NglReadPixels() $rMxMQ

[2] OpenGL $NglDrawPixels() $rMxMQ

$=$3$G2f!9$O!"ReVolver/C40 $G:NMQ$7$?3<!85%a%b%j9=B$$H%-%&C%7%e&7%9%F%`$KJ;MQ$K$h$j!"4000$^3$ DxEY$N%\%j%e!<%`%G!<%?KBP9$k%j%"%k%?%$%`2D;k2=$r<B9T$9$k$3$H$rL\I8$H$9$k!#$^$?2f!9$N%7%9%F%`GOReVolver/C40 $HF1MM$K!"0eNE2hA|@8@.$@$1GJ$/2J3X5;=Q7W;;$N2r@O$dN.BN$N2D;k2=JI$b9T$($k%7%9%F%`$K$9$k$?$a!"H>F)L@%\%j%e!<%`$NI=<(!"1s6aK!Kh$k2hA|@8@.$H$$$C$?MW7o$bK~B-5;$k!#

K\%7%9%F%`$K$*$1$k%T%/%;%kCM7W;;$O!"*ReVolver/C40 $HF1MM$K1 $D$N%T%/%;%k$N51EY$N7W;;$rJ#?t$N%W%m%;%C%5$G=hM}$9$k%\%/%;%kJBNs=hM}$H$$&J}<0$r:NMQ$7$F$$k!#$3$NJ}<0$O%l%$%-%&%F%#%s%0"%k%4%j:%`(2.1.2 @a;2>H)$r;k@~J}8~$KJBNs2=7?bNG"$k!#

3NJ}K!GO!"%9%/%j!<%s>e$N3F%T%/%;%k4$H$KH/@8$9$k;k@~$K1hCF!";k@~$H8r:9$9$k%\%/%;%k$r;kE@$K6a$$=g$K%5%s%W%j%s%0$7F$$/!#3l$r<0(3)$r MQ$$F;k@~>e$N%\%/%;%k$,J/Jk$^$G7+jJV7!"%T%/%;%kCM$r5a$a$k!#%5%s%W%j%s%0$9$k%\%/%;%k?t$,N$N>19g!"%T%/%;%kCM$O<0(3)NC_NHF10lNCMHJk!#D^jC_Nr5aak3HKhCF%T%/%;%kCM$r5a$ak3$H=PMh$k!#

<0(3)NC_k, A_{k-1}OC_{k-1}, A_{k-1}, c(v_k), \alpha(v_k)$+$i5aak3H$,$G$-!"(c(v_k), \alpha(v_k)$Ov_k$rJQ49$7$?CM$G$"$k$+$i!"7k6IC_K, A_KOC_{K-1}, A_{K-1}, v_k+$i5a$ak3H,G-$k!#

Bh3 >O @lMQ%O! <%I%&%'%"$rMQ$$$?2D;k2=%7%9%F%`

K\>OGO2.3.5 @a$G=R$Y$?@lMQ%O! <%I%&%'%"$rMQ$$$?2D;k2=%7%9%F%`4D6-$NFC D'$K$D$$F$$/D+=R$Y!$8zN(Nh$$<BAuJ}?KKD$$F9M$($F$$/!%

3.1 %T%/%;%kCM7W;;

K\%7%9%F%`$G$O1<!85$K@\B3$7$?i(i = 0,1,!D,m-1) HVL\$N%N!<%I$,$=$l$>$l m J,3d$7$?%5%V%\%j%e!<%`$N#1$D$r%m!<%+%k%a%b%j$K;}$A!$$C_N $NA22=<07W;; NCfN!$$C_x $+$i C_y $NItJ,$N7W;;$r9T$&!%$3$3$G x = iN/m, y = (i+1)N/m - 1 G"$k!%$3$N9=@.$G%Q%$%W%i%$%sF0:n$r5$;k3HG!$%T%/%;%kCM7W;;$N9bB.2=$r?^$G$F$$k!%

3.1.1 ;k@~J}8~$,Ii$N>l9g

;k@~$N<g<4@.J,$,@5(0J2<!$¥k@~J}8~$,@5!W$H8F$V)$N;~$H!$;k@~$N<g<4@.J,$,Ii(0J2<!$¥k@~J}8~$,Ii!W$H8F$V)$N;~HG$O!$=hM}$r9T$&J}8~$,5U$KJk!%hCFNc($P;k@~J}8~$,@5$N%T%/%;%kCM$N7W;;$r9T$C$F$$k:GCf$K;k@~J}8~$,Ii$N%T%/%;%kCM7W;;$r9T$*$&H9kH!$=hM}$N>WFM$,5/$3$j!$@-G=$,Dc2<$9$k!%$=N?$a!$>o$K=hM}$NJ}8~$,@5$HJkh&$K2sO)$r<B8=5;kI,MW,$"$k!%

$^$:<0(3)$O<!$N<0(5)Nh$&$KJQ7A9k3H$,$G$-$k!%

$$D_{k-1} = D_k \cdot t(v_{k-1}) + (1 - t(v_{k-1})) \cdot c(v_{k-1}) \tag{5}$$

<0(3)KhCF5aailk%T%/%;%kCM$C_N $O!$<0(5)ND_0 $HF10l$NCMHJ$k!%<0(5)$N$D_{k-1} NCMO$D_k, c_{k-1}, t_{k-1} $+$i5aak3H$,$G$-$kNG!$7k6I$D_k, v_{k-1} $+$i5aak3H$,$G$-$k!%

$C_N = D_0$ $N>ZL@ $C_N = D_0$ HJk3HOD>4QE*$KJ,$+jK$/$$?$a!$$3$3$G4JC1$K>ZL@$9$k!%$3$3$G$OJX59>e%5%s%W%k6u4V$N30B&KOL5?'F)L@($t(v_k) = 1, c(v_k) = 0)$N%\%/%;%k$,B8:_$9kH9k!%$=$3$G!$T_{-1} = 1, C_{-1} = 0$!$D_{N+1} = 0H9kH<0(5)hj

$$\begin{aligned} D_0 &= D_1 \cdot t(v_0) + (1 - t(v_0)) \cdot c(v_0) \\ &= D_2 \cdot t(v_1) \cdot t(v_0) + (1 - t(v_1)) \cdot c(v_1) \cdot t(v_0) + (1 - t(v_0)) \cdot c(v_0) \\ &\cdots \\ &= D_{N+1} \cdot t_{N-1} \cdot t_{N-2} \cdots t_0 + (1 - t(v_N)) \cdot t(v_{N-1}) \cdot t(v_{N-2}) \cdot t(v_{N-3}) \cdots t(v_0) \end{aligned}$$

$$
\begin{aligned}
& +(1-t(v_{N-2}))\cdot c(v_{N-2})\cdot t(v_{N-3})\cdots t(v_0)+\cdots+(1-t(v_0))\cdot c(v_0) \\
= \;& D_{N+1}\cdot t_{N-1}\cdot t_{N-2}\cdots t_0+(1-t(v_{N-1}))\cdot c(v_{N-1})\cdot T_{N-2} \\
& +(1-t(v_{N-2}))\cdot c(v_{N-2})\cdot T_{N-3}+\cdots+(1-t(v_1))\cdot c(v_1)\cdot T_0+(1-t(v_0)\cdot C_0
\end{aligned}
$$

HJ$k!%$^$?<0(3) hj!$

$$
\begin{aligned}
C_N &= C_{N-1}+(1-t(v_N))\cdot c(v_N)\cdot T_{N-1} \\
&= C_{N-2}+(1-t(v_{N-1}))\cdot c(v_{N-1})\cdot T_{N-2}+(1-t(v_N))\cdot c(v_N)\cdot T_{N-1} \\
&\quad \cdots \\
&= C_{-1}+(1-t(v_0))\cdot c(v_0)\cdot T_{-1}+(1-t(v_1))\cdot c(v_1)\cdot T_0+(1-t(v_2))\cdot c(v_2)\cdot T_1 \\
&\quad +\cdots+(1-t(v_{N-1}))\cdot c(v_{N-1})\cdot T_{N-2}+(1-t(v_N))\cdot c(v_N)\cdot T_{N-1}
\end{aligned}
$$

3lhj$T_{-1}=1, C_{-1}=0$!$D_{N+1}=0$ $rBeF~$9kH!$C_N=D_0$ G"k3H,>ZL@G-$k!%

7k6I!$;k@~J}8~$,Ii$N>l9g$Ki HVL\$N%W%m%;%C%5$K<0(5) ND_{N-i}$ $N7W;;$r9To;kH!$%\%j%e!<%`!&G!<%?$,N^3%\%/%;%kH9kH!$0,1,!D!$N HV$N%W%m%;%C%5$N=g$G=hM}$r9T$&$3H,G-$k!%

0J>ehj!$;k@~J}8~$,@5$N;~$O<0(3) $r7W;;$7!$;k@~J}8~$,Ii$N;~$O<0(5) $r7W;;$9k3HG!$>o$K=hM}$NJ}8~$rC1J}8~H9k3H,G-$k!%$7$+$7$3$NJ}K!$G%Q%$%W%i%$%sJ}<0$G7W;;$r?J$a$F$$$/$?$aKO!$<0(3) $r7W;;$9$k2sO)$H<0(5) $r7W;;$9$k2sO)N>J}$rMQ0U7F$+$J$/$FOJiJ$$!%<B:]$ReVolver/C40$G$ODSP $N%W%m%0%i%`$G;k@~J}8~$K=>$C$FL?Na$rA*Br9kh&KJCF$$$k!%

3.1.2 5U8~$-%T%/%;%kCM7W;;2sO)$N:o8:

K\%7%9%F%`GO3F%N!<%IF|$KJ#?t$N%T%/%;%kCM7W;;%f%K%C%H(PCU) $,AuHw$5lF$*$j!$=hM}$NN.lrC1J}8~K9k3Hr9M$($?>l9g!$%N!<%I4V$N=hM}$NN.$l$rC1J}8~$K9lPh$/!$%N!<%IF|bGN7W;;$NN.$l$O%N!<%IC10L$G$N=hM}$HE}0l9kI,MWOJ$$!%D$^$j!$;k@~J}8~$,Ii$N>l9g$O!$%N!<%IF|b$G$N7W;;$O;k@~J}8~$,@5$N>l9g$HF1MM$K!$$D$^$jF1$82sO)$G7W;;$r9T$$!$%N!<%I4V$KEAGE9k%T%/%;%kCM$NESCf7k2L$H$=$N%N!<%I$G7W;;$5l?%T%/%;%kCMHr7W;;9k;~N_!$<0(5) $N2sO)$G7W;;9kh&K9lP$h$$$3HKJk!%$=$NMM;R$r?^8 $K

<(\$9!%

?^8 \$N>e2<\$N2 \$D\$N2hA|\$O\$I\$A\$i\$b!\$;k@~J}8~\$,Ii\$N>l9g\$N%G!<%?5Z\$SDL?.
\$NN.\$l\$r\$=\$l\$>\$lD>@~!\$E@@~\$G<(\$7\$F\$\$k!%3F%N!<%I\$O:8NY\$j\$N%N!<%I\$+\$iF@
\$?;k@~>pJs\$rMQ\$\$F<+%N!<%IFb\$G=hM}\$r9T\$J\$!\$@8@.\$7\$?7k2L\$r1&NY\$j\$N%N!<
%I\$KE>Aw\$7\$F\$\$k!%?^8 \$N>e?^\$O<+%N!<%IFb\$N=hM}\$rA4\$F<0(5) \$rMQ\$\$F9T\$G\$?
>l9g\$r<(\$7\$F\$\$k!%?^8 \$N2<?^\$O@h\$[\$I=R\$Y\$?!\$%N!<%IFb\$G<g\$K<0(3) \$rMQ\$\$
\$kJ}K!\$rI=\$7\$F\$\$k!%8e<T\$G\$O7W;;7k2L\$rE>Aw\$9\$k:]\$K<0(5) \$N<0\$rMQ\$\$FJd
@5\$r9T\$&I,MW\$,\$"\$k\$,!\$\$=\$N=hM}\$O?^8 \$K\$b\$"\$k\$h\$&\$K%N!<%IFb\$G0l2s\$N\$_\$G
\$"\$k!%

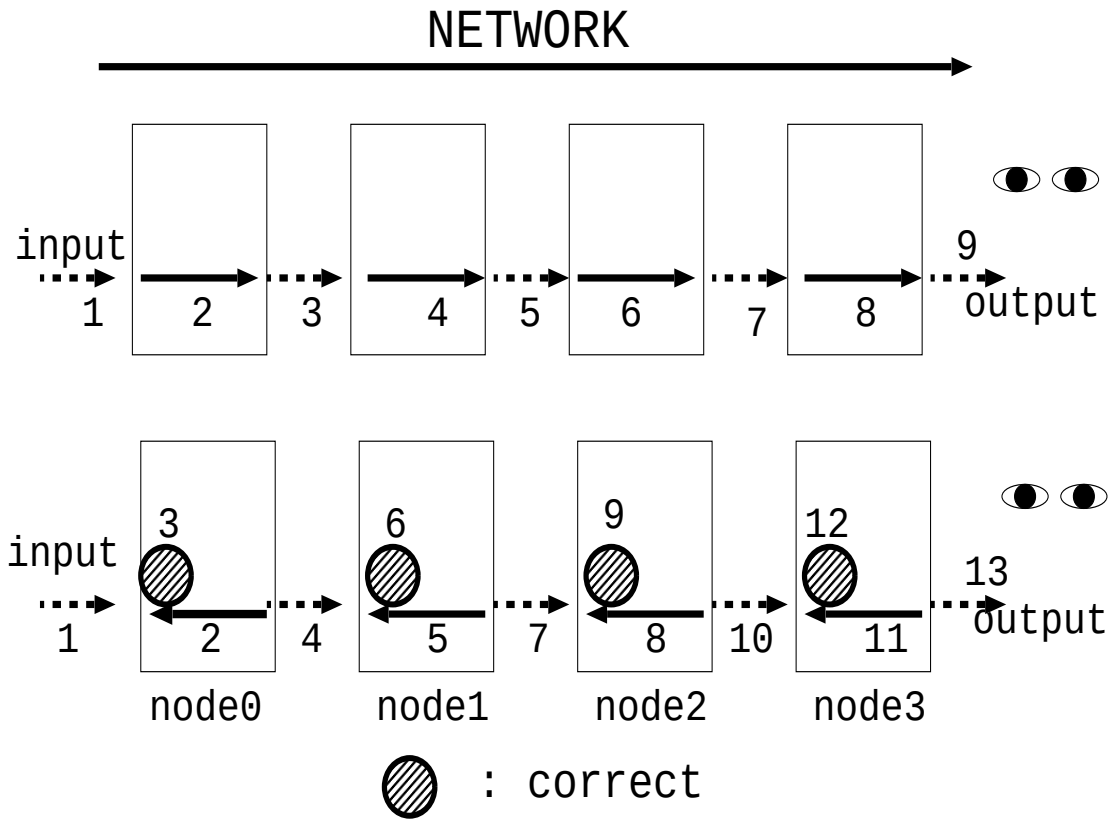

?^8: %T%/%;%kCM7W;;\$N=g=x

K\Mh\$J\$i\$P;k@~J}8~\$,@5Ii\$K1~\$8\$F\$=\$l\$>\$l<0(3)!\$(5) \$KBP1~\$9\$kJL!9\$N2s
O)\$rMQ0U\$9\$k\$I,MW\$,\$"\$C\$?!%\$7\$+\$7!\$3F%N!<%I\$KJd@5\$N\$?\$a\$N<0(5) \$N2sO)\$r
0lCJJ,\$@\$1MQ0U\$9\$k\$3\$H\$GF1\$8=hM}\$r\$9\$k\$3\$H\$,2DG=\$H\$J\$C\$?!%%7k2L\$H\$7\$FN>
J}\$N2sO)\$rMQ0U\$7\$?;~\$HHf\$Y\$k\$H!\$%\%j%e!<%'6u4V\$N%5%\$%:\$,N^3,%N!<%I?t\$,

m, H9kH2sO)LL@QO\frac{N+m}{2N}$ HJ$k!%$N \gg m$ $@$H9k$H!$2sO)LL@QOLs\frac{1}{2}$ K9k3H,G-$k!%

ReVolver/C40 K*$$F$bF1MM$N5DO@$,@.$jN)$D!%$7$+$7*ReVolver/C40* GON^3 $N%\%j%e!<%`6u4V$rNKg$N%9%i%$%9$KJ,3d$7$FJBNs=hM}$r9TCF$k!%$5iK1%9%i%$%9$4HK1%W%m%;%C%5$r3d$jEvFk$H$$&9=@.KJCF$$k$?$a!$N = m$H9M$($ilk!%$=$N$?$a$3$3$G=R$Y$?<jK!$rMQ$$$F$b8z2L$,$J$$H$$($k!%

0lJ}2f!9$ON = 4096, m = 128$r9M$($F$*$j!$$=$NHfN($+i3$N<jK!$O==J,M-8zG"kH$$($k!%

3.2 Early Ray Termination $N8z2L

%7%_%e%l!<%7%g%s7OK*1kIi2YJ,;67ABV$NBeI=E*$JbNH7$F!"%V%m%C%/J,3d$H%5%$%/%j%C%/J,3d$,$"$k!#0lHL$K%5%$%/%j%C%/J,3d$r9T$&$H!"%V%m%C%/J,3d$KHfYFIi2Y$,6Q<A$JbNKJ$k!#$7$+$7%G!<%?$N2D;k2=$r9M$($?>19g!"%5%$%/%j%C%/J,3d$G$ODL?.2s?t$,A}2C$7!"IA2hB.EY$,CY$/$J$k!#

=>Mh$N*ReVolver/C40* GN2D;k2=GO!"%W%m%;%C%5$,0l<!85G[Ns9=B$$G9=@.5lF*$j!":G8eHx$N%W%m%;%C%5$+$i@hF,$N%W%m%;%C%5$X$N5"4T%Q%9$,B8:_7J$+$C$?!#$=N?$a%5%$%/%j%C%/$K%G!<%?$,G[CV5lk3HO9MN8$K$$$lkI,MW,J+C?!#7+$7%7%_%e%l!<%7%g%s$H$NO"7H$r=E;k7?2D;k2=%7%9%F%`GO!"%7%_%e%l!<%7%g%sB&$G0lHLE*$K9Tol$k%5%$%/%j%C%/$J%G!<%?JBP1~$7$?9=@.$K9Y$-$G$"$k!#

VisA GO%N!<%I4V%M%C%H%o!<%/$r4D9=B$$K7F!"%5%$%/%j%C%/J,3d$KBP1~7F$$k!#$^$?2f!9$O!"Early Ray Termination(ERT) <jK![9] $rMQ$$$FDL?.2s?t$NA}2C$KH<$&IA2hB.EY$,Dc2<9kLdBj$r>/$7Gb4KOB7?$$H9M$($F$$k!#$=$3$GK\@a$G$O%5%$%/%j%C%/$JIi2YJ,;67ABV$K$*$1$kERT $NM-8z@-$K$D$$F8!>Z9k!#ERT $N8z2L$O%G!<%?0MB8@-$,9b$$$?$a"8!>Z$K$*$$F$O6qBNE*$K$$/D+$N%\%j%e!<%`$G!<%?rNcK5s$2!"DjNLE*$K9T$&!#

3.2.1 ERT HO

%\%/%;%k(3<!85N)J}3J;R) $G9=@.$5l?%\%j%e!<%`6u4V$G$N%\%j%e!<%`%l%s%@%j%s0$O!$?^2Nh$&&$K%9%/%j!<%s$N1%T%/%;%kKh$K@8@.5l$?;k@~e$K$"$k%\%/%;%k$N?'$r$=$N%\%/%;%k$NF)L@EY$K=>CF!$;kE@$N$[$&+$i@Q;;$7$F$$$-$=$N%T%/%;%kCM(R,G,B,T) H9$k!#ERT HO3N%T%/%;%kCM7W;;$N:]$K!$F)L@EY$,$"$i+8a@_Dj7?4p=`CM$r2<2s$C$?$i!$$=$l0J9_$N%\%/%;%k$+$i$N1F

6AO4$/> .$5$$?$a! $$=3G7W;;rBGA$-$CF7$^$&$H$$$&<jK!G"$k

3.2.2 BP>]H9$kJBNs%\%j%e!<%`%l%s%@%j%s%0%"%k%4%j%:%`

K\8!>ZGO!$N Kg$NN^2 %5%$%:$N%9%i%$%9$+iJkN^3$ $N%\%j%e!<%`%G!<%?$r P Bf$N%W%m%;%C%5$K$\frac{1}{P}$ $E$DJ,2r$7!"3F%W%m%;%C%5$O!$C4Ev$9$kM(=$\frac{N}{P}$)Kg$N%9%i%$%9$KBP$7$F!$%l%$%-%c%9%F%#%s%0%"%k%4%j%:%`(Front-to Back) $K4p$E$-!$%T%/%;%kCM7W;;$N?$a$NP CJ$N%Q%$%W%i%$%s$rEk:\$7JBNs=hM}$r9T$&3H$r9M$($k!%%T%/%;%kP(i,j) KBP9$k%T%/%;%kCM7W;;$NN.lr?^9 $K<($9!%

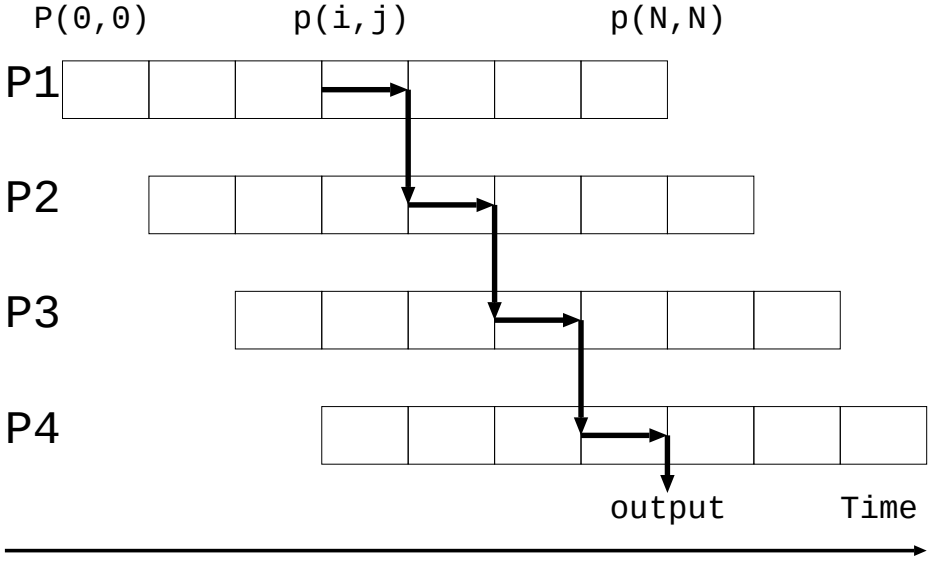

?^9: %T%/%;%kP(i,j) KBP9$k%T%/%;%kCM7W;;$NN.$l

3.2.3 %5%$%/%j%C%/J,3d$K$*$1$kERT

:#,P = N $N>l9g$K1%U%l!<%`J,$N=hM}$KMW9k;~4V$rDL?.;~4VC $H7W;;~4VT NOBH7FI=8=9k$H,$"$kP(< N) KBP7$FI}$\frac{M}{m}$ $N%V%m%C%/%5%$%/%j%C%/J,3d;~(0J2<!$m 2s%5%$%/%j%C%/[1] $H8F$V!#) $KIA2h$KMW9k;~4V$T_{M,m}$ $O,

$$T_{M,m} = (C + \frac{M}{m} \times T) \times m \tag{6}$$

HJ$j,%V%m%C%/J,2r(m=1 $KAjEv) KHfY$FC \times (m-1)$@$1=hM};~4V$,A}2C 9k.

[1] ?^10 $NBLOCK,CYCLIC,BLOCK & CYCLIC O=1>$1m = 1, m = 4, m = 2 G"$k

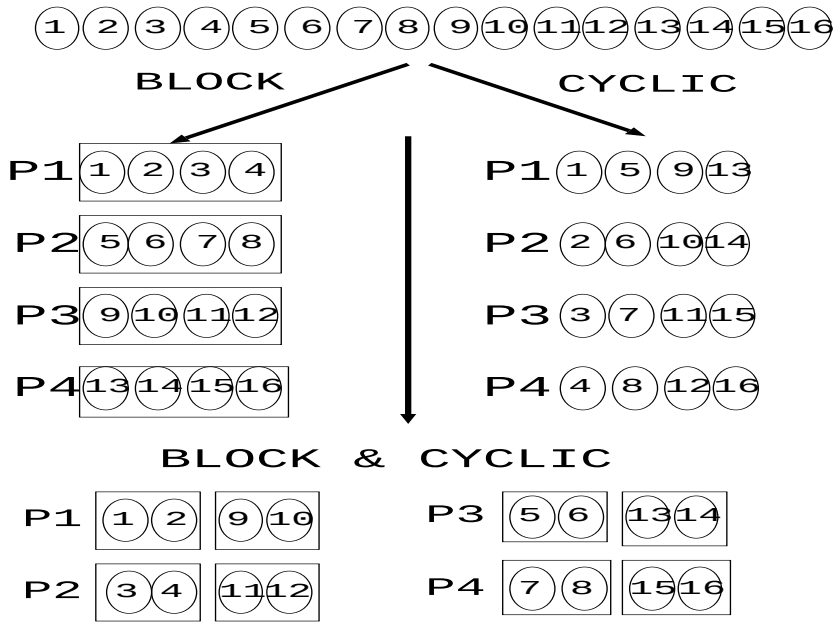

?^10: %G!<%?$N%V%m%C%/J,3d$H%5%$%/%j%C%/J,3d

<!$KERT rE,MQ9$k!#E_i%$N;k@~$,$\frac{i}{m}$ $^$G$N%5%s%W%j%s0$GTerminate 9k $H!$IA2h;~4VT_{M,m,Ei} $O!$E_0 = 0$ H9kH!$

$$T_{M,m,Ei} = (C + \frac{M}{m} \times T) \sum_{i=1}^{m} i \times \frac{Ei - E_{i-1}}{100} \qquad (7)$$

HJ$k!%

$3$3Gb$7E NCMH$\frac{T}{C}$ NCM,$"$kDxEYBg$-$/Jl$P!$%W%m%C%/J,3d$N>l9g$K HfYF9bB.2=$,?^$lkH9M$(B$ilk!%

3.2.4 8!>Z

K\@aGOA0@a$G=R$Y$?,%5%$%/%j%C%/Ii2YJ,3d7ABVK*1kERT $N8z2L$r,<B :]$K$$$/D+$N%\%j%e!<%'%G!<%?(256^3) KE,MQ7$F8!>Z$r9TC?!%

3F%\%j%e!<%'%G!<%?KBP7$F!$F)L@EY$,0.05 0J2<$KJC$?$i%T%/%;%kCM7W;; rBGA@ZkH$$&J}?K$G!$$=l>lE_i $r7W;;$7$?!%%5%$%/%k?tm=8 $N;~$N7k 2L$rI=1 $K<(B$9!%

;HMQ7?%G!<%?$O<!$N4<cN'G"$k!%

- sphere

  Cf?4$,(128,128,128) $GH>7B$,128 $N5e!%F)L@EY$OCf?4$,0.8 $G:G$bITF)L@ $G=y!9$KF)L@KJCF$$$-5e$NI=LL$G$O1.0 KJCF$$$k[1)]!%

[1)] F)L@EYNCMO0.0(ITF)L@)$+$i1.0(F)L@)$^$GNCMrHk

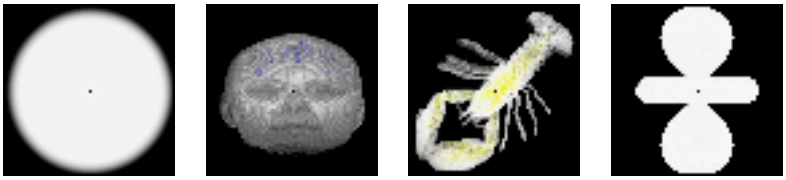

(a)sphere (b)Head (c)lobster (d)hydrogen

?^11: ;HMQ7?%\%j%e!<%'%G!<%?$N354Q

- Head

  ?MNF,ItN%\%j%e!<%'!<%?G"$k!#BP>]$O%\%j%e!<%'6u4VA4BN$K9-$,GF $$$k!#F)L@EY$OA4$F0.5 G"$k!%

- lobster

  J*BN$r9=@.$7$F$$$kItJ,$NF)L@EY$O0.8 $+$i1.0 $N4V$GJQ2=9k!%

- hydrogen

  J*BN$r9=@.$7$F$$$kItJ,$NF)L@EY$O0.9 $+$i1.0 $N4V$GJQ2=9k!%

A4FN2hA|HbJ*BN$N30B&$NItJ,(9u$$6u4V) $NF)L@EY$O1.0 KJGF$$$k!%

I=1: m = 8 $N;~$NE$_$(%) $E_8 = 100$

	E_1	E_2	E_3	E_4	E_5	E_6	E_7
sphere	0.00	0.96	24.99	41.34	50.22	53.40	53.50
Head	0.00	1.90	31.13	41.53	45.45	46.53	46.53
lobster	0.00	0.00	0.00	1.00	5.17	5.17	5.17
hydrogen	3.15	9.45	26.15	40.31	40.84	41.02	41.02

<!$K*ReVolver*/C40 GN<BB,%G!<%?C=164msec,T=207msec[2] rE,MQ7$F!$%W %m%;%C%5?tP $rJQ2=$5$;[1)] 7W;;$7$?7k2L$rI=2 $K<($9!%lobster $N2hA|$G8z2L$,>/$J$+$G$?$N$O!"lobster <+BN$,Gv$/!"F~<M$7$?;k@~$,$9$0$KBNFb$rDL2a7F7^$&$?a!"ITF)L@KJ$k%T%/%;%k,Hs>o$K>/J+G?$?a$@$H9M$(il$k!#B>$N3 DOERT $N8z2L$,8=lF!"<B9T;~4V$,C;=L$7$F$$$k!%

M NCMr$"$kDxEYBg$-$/$7!$ERT $rMQ$$$k3H$G!$%G!<%?$r%5%$%/%j%C%/$KJ,3d$9k3HG@8$8$kDL?.;~4V$NA}2C$KhkIA2hB.EY$NDc2<$r2r>CG-k3H,J,$+$G$?!%$^$?l%s%@%j%s0$NBP>]HJ$k%\%j%e!<%'6u4V$K!$$"$kDxEY9-HO

[1)] 2hA|NBg-5OA4F256^3$ $N?$aM = \frac{256}{P}$ G"$k

I=2: m=1 $N;~$KBP9k<B9T;~4VHf(%))(C:T=164:207)

	P = 8 (M = 32)				P = 16 (M = 16)			
m	1	2	4	8	1	2	4	8
sphere	100	81	81	84	100	83	86	95
Head	100	81	83	85	100	82	88	97
lobster	100	101	105	114	100	104	112	130
hydrogen	100	81	82	87	100	83	88	99
ERT L$;HMQ	100	102	107	116	100	104	114	133

0O$K%\%j%e!<%`%G!<%?$,B8:_9l$P!$%5%$%/%j%C%/$KJ,3d7J$$>l9ghj$b?t%$+$i20%6a$/$NB.EY8~>e$,8+ilk3H,J,$+$C$?!%

3.2.5 9M;!

%7%_%e&l!<%7%g&s$HO"7H$5$;$?2D;k2=%7%9%F%`K*$$$F$O!$$=$NKDBg$J%G!<%?$NE>Aw;~4V$,LdBjHJk?$a!$$&&^$/Ii2YJ,;6$7$FJBNs$K=hM}7J$/$FOJiJ$$!%Ii2YJ,;6$N0l7ABV$G$"$k%5%$%/%j%C%/J,3d$G$O!$$DL?.;~4V$,A}2C$7$FIA2hB.EY$,Dc2<9k3H$,7|G0$5lk$,!$$ERT $rMQ$$$k3H$G!$2hA|r[Hs$INt2=$5$;$k3HJ/hj9bB.$JIA2h$,2DG=G"k3H,3NG'G-$?!%

ERT $rMQ$$$F!$%5%$%/%k?tmNCMrBg$-$/9k3H$GDL?.NL$NA}2C$rM^@)$9k3HOG-$?$,!$:#2s;HMQ$7$?%\%j%e!<%`%G!<%?$N%h$&$K!$$H>?t6a$/$N;k@~$,Terminate$9$k$3$H$J$/:G8e$^$G7W;;$5$l$k$?$a,%5%$%/%k?t$rB?$/$7$F$b7`E*$K9bB.KJkH$$$&&3HOJ$$!%:#2s$N%\%j%e!<%`%G!<%?$G$O!$%5%$%/%k?t$O2DxEY$,BEEv$G$"$k$H;W$($k!%

J*,:#2s$O*ReVolver*/C40$G$N<BB,CM$r%Y!<%9$K5DO@$r9TC?$,!$PC%/%i%9%?EyGNUBNs%\%j%e!<%`%l%s%@%j%s%0$GF1MM$N%5%$%/%j%C%/J,3d$r9T$&$H,0lHLKC >> T G"k?a,M,ErAjEvBg$-$/HC$F=i$a$FM-8z@-$,3NG'G-$k!%$^$?!$$=Nh$&$J4D6-K*$$$F$O!$k@~$rJ#?tF1;~$K=hM}$7!$DL?.2s?t$r8:$i$9$3H,9M$($ilk!%$=$N>l9g!$$INh$&$K;k@~rAH_9go;$F=hM}$r9k$+$,=EMW$JLdBj$KJCF/$k!%B?$/$N;k@~$rF1;~$K=hM}$9kH!$DL?.2s?t$OBg$-$/8:>/9k$,!$$=NJ,ENCM$,Dc2<$7F7$^$&!%ENCM,Dc2<7F7^$&$H:#2s$Nlobster$NMM$K!$ERT $N8z2L$,K>aJ$/$JCF7^$&!%

3.2.6 K\%7%9%F% 'SX$NE,MQ

%G!<%?$r%5%$%/%j%C%/$KJ,3d$7$?:]$NERT $N8z2L$K$D$$$F$OA0@a$^GK<(7?!%K\%7%9%F% 'SK$*$$$F$b%7%_%&%l!<%7%g%s$+$i@8@.$5lk%\%j%e!<%'%G!<%?$,!$3F%N!<%I$K%5%$%/%j%C%/$KJ,3d$5lF$$k>19g$O!$3$N<jK!$rMQ$$$F=hM}$N9bB.2=$r?^k!%H3m$GEarly Ray Terimination $N<jK!$O!$3.2.2 9 'SG=R$Y$?$h$&$K;kE@$+$i%9%/%j!<%sXH8~$+$&;k@~$K1h$C$FF)L@EY$N7W;;$r9T$$!$7W;;ES Cf$N%T%/%;%k$NF)L@EY$,$"$k4p=.'$r2<2s$C$?;~E@$G7W;;rBGA$-$k$H$$&<jK!JN$G!$D>46E*KOA0@a$G<($7$?$h$&$J;k@~J}8~$,Ii$N>19gKOE,MQ9k3H$,$G$-$J$$H9M$($ilk!%&7$+$7%G!<%?$,%5%$%/%j%C%/$KJ,3d$7F"$k>19g$O!$7W;;$N;EJ}$r9)IW$9k3HG!$;k@~J}8~$,Ii$N>19g$G$bEarly Ray Termination <jK!rE,MQ9k3H,G-$k!%0J2<!$$=$NJ}K!$K$D$$F=RYk!%

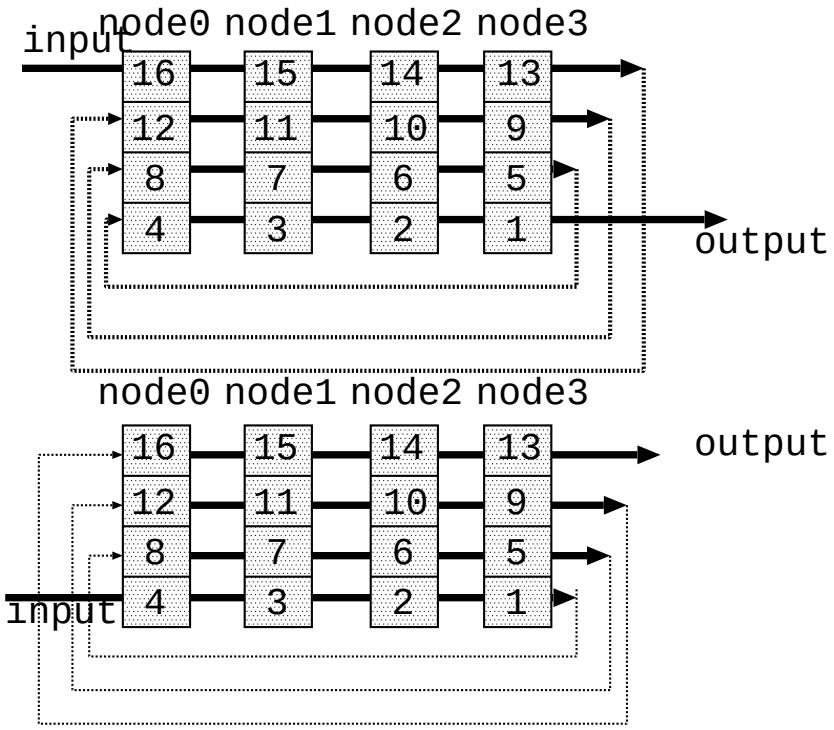

?^12: ;k@~J}8~$,Ii$N>19g$NERT

%N!<%I?t$,4!$%5%$%/%k?t$,4 $N>19g$rNc$K5s$2$F@bL@$9$k!%7W;;$9Y-%5%V%\%j%e!<%'%O;kE@$K6a$$$[$&$+$i1!$2!$!D!$l6 HJCF$$k(?^12). %M%C%H%o!<%/$OC1J}8~$Gnode1 "*node2 "*node3 "*node4 "*node1 "*!D$H4D9=B$$KJC

$F$$k!%=>Mh$NJ}K!$G$Onode0 $N16 $+$i7W;;$r;O$a$F!$node1 $N15!$node2 $N14!$node3 $N13!$node1 $N12!D$H7W;;$r?J$a$k!%$7$+$7!$ERT rE,MQ9k?aK$O;kE@$K6a$$$[$&$+iNN_@QF)L@EY!$$"$k$$$OITF)L@EY$,I,MW$G$"$k!%7+$7$3$NJ}K!$G$O7W;;=g=x$,5UJN$G!$ERT rE,MQG$-$J$$!%

$=$3$G7W;;$N=g=x$rnode0 $N4!$node1 $N3!$node2 $N2!$node3 $N1!$node0 $N8!D$H$7!$node3 GN=hM}$,=*N;$9kEYK;kE@N[$&$+iNN_@QF)L@EY$,J,$+k?$a!$ERT $,E,MQ$G$-$k!%

3.3 2D;k2=J}K!

K\@aGO;~JQ%\%j%e!<%'%G!<%?$N2D;k2=J}K!$K$D$$F=RYk!%$^$:%\%j%e!<%'%a%b%j$r3=E2=$9$k>l9g$NLdBjE@$r5s$2!$<!$K3=E2=$;$:$K2D;k2=$9$kJ}K!$K$D$$F=RYk!%

3.3.1 3=E2=$N7gE@

2D;k2=KO2.2@a$G=R$Y$?$h$&$J2<cN'$NMxMQ7ABV$,9M$($ilk!%*ReVolver/C40$G:NMQ$7$?%\%j%e!<%'%G!<%?$r3=E2=7F<g<4Ey4V3V%5%s%W%j%s%0J}<0$rMQ$$$F2D;k2=9k$H$$$&J}<0$O!$;kE@$N0ICV$Khi$:<B;~4V2D;k2=$,2DG=G"$k!%$=N?$a1$D$N%\%j%e!<%'%G!<%?$r;kE@rJQ(!$2?EY$b7+jUV74Q;!!$2r@O$r9T$&%*%U%i%$%s2D;k2=$KE,$7$?J}<0$G$"$k$H$$$($k!%

7+$7!$%7%_%e&l!<%7%g%s$NESCf7P2a$N4Q;!JI$KMxMQ$5lk%*%s%i%$%s2D;k2=$G$O!$%\%j%e!<%'%G!<%?$,0lDj4V3VT$G99?7$5$l$k!%3$3$G0lDj4V3VT$H$O^$5$K%7%_%e&l!<%7%g%sB&$K$*1$k!$%\%j%e!<%'%G!<%?$N@8@.4V3VG"kH$$$CFh$$!%G!<%?@8@.7O$N=hM}$rCfCG5;$J$$?aKON^3$P%$%H$N%\%j%e!<%'%G!<%?99?7=hM}$H99?7$5l?%\%j%e!<%'%G!<%?$K4p$E$$?IA2h$rTICL$K~$G<B8=$5$;$J1lPJi:!$%l%$%F%s%7KBP9$kMW5a$,/$$!%=N?a?7$7$%\%j%e!<%'%G!<%?$O<!$N%G!<%?$,/$k$^$G$K2D;k2=$G$-$J$/$FOJi:!$4V3VT$G%G!<%?99?75Z$S!$2D;k2=$,$G$-$J1l$P2D;k2=%7%9%F%'$KCWL?E*$JLdBj$r0z$-$*$3$9$3$H$b=J,9M$(il$k!%

%\%j%e!<%'%G!<%?$r3=E2=$7$F2D;k2=$9kH$$$&J}K!GO!$@8@.$5l?$N^3Dx EY$N%\%j%e!<%'%G!<%?$r3=E2=$7$FA4$F$N%N!<%I$Kb?$;$k$?$a$K!$B?/$N;~4V$T_{update}$,$+$+$k!%=N?a!T,Hf3SE*C;$$H3=E2=N?a$N;~4V$,Bg$-$J%M%C%/HJ$jF@$k!%

T HT_{update}N;~4V$O=$l$>$l%\%j%e!<%'%G!<%?$N5%$:$NlF6A$r&1k!%T

O5iK%7%_%e&l!<%7%g&s$NU#;($5Kb1F6Ar&1k!%T $,Hf3SE*Bg$-$/!$3=E2=7?8eIA2h9kNK==J,$J4V3V$G$"$l$P=>Mh$NJ}<0$GIA2h$,2DG=G"k,!$T $,>.$5$/$T_update$N;~4V$,Bg$-$/!$@)Ls$rK~$?$9$3$H$,$G$-$J$$>l9g$b9M$(il$k!%

<!9'GO%\%j%e!<%'%G!<%?$r3=E2=$9k3HJ$/%\%j%e!<%'%l%s%@%j%s%0$r9T$&J}<0[16]$K$D$$$F@bL@9k!%

3.3.2 %\%j%e!<%'%G!<%?$N3=E2=$r9ToJ$$J}<0

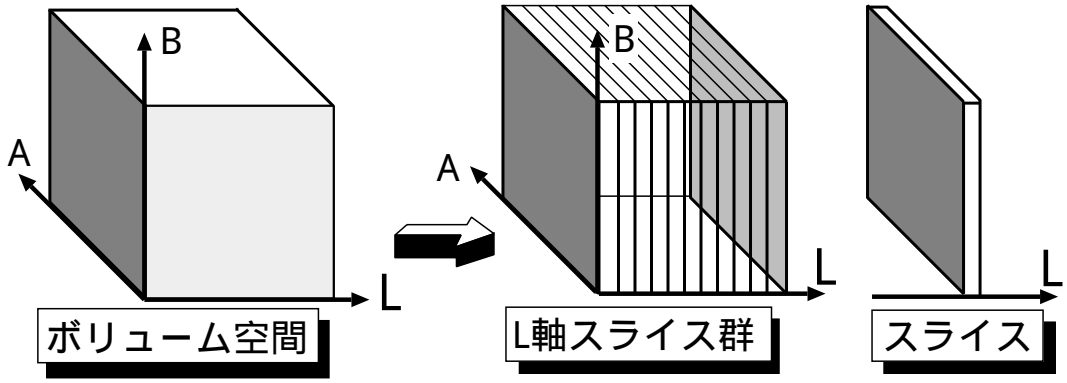

?^13: %\%j%e!<%'6u4V$HL<4%9%i%$%972

K\9'GO%\%j%e!<%'%G!<%?$r3=E2=$;$:$K2D;k2=9kJ}<0KD$$$F=RYk!%$^$:$OJ9_$N@bL@GI,MWHJk=tMQ8l$NDj5A$r9T$&!%

%\%j%e!<%'6u4V$r?^13$Nh&$K!$L<4$N@0?t:BI8E@1!$2!$$!D!$n-1$K1hCF!$L<4$K?bD>$Jn 8D$N%9%i%$%9$KJ,3d$7!$$=li$r%9%i%$%972H9$k!%

$3$3$G!$3F%9%i%$%9$KBP7F!$L<4$KBP7F?bD>JLLr!'%9%i%$%9$NCGLL!W,L<4$KJB9T$JLL$r!'%9%i%$%9$NB&LL!W$H8F$V!'%9%i%$%972KBP7FO!$N>B&$K$"$kL<4$K?bD>$JJ?LL$O!'%9%i%$%972$NDlLL!W$"$H4$D$NI=LL$O!'%9%i%$%972$NB&LL!W$H8F$V!'%$^?!$%9%/%j!<%s1 9TJ,$r!'%9-%c%s%i%$%s!W$H8F$S!$%9-%c%s%i%$%s>e$N;k@~$N=8jr!'%k@~72!W$H8F$V!%

$ReVolver/C40$Nh&$K%\%j%e!<%'%G!<%?$,3=E2=7F$"$k%7%9%F%'GO!$k@~$O%9%i%$%972$NDlLL$+$iN_F~<M9k3H$K5"Ce$G$-$?!'$=$N?$a!$3F;k@~7W;;$OA4$F@hF,$N%W%m%;%C%5$+$i;O$^CF$$?!%

7+$73=E2=$r7J$$>l9g$O%9%i%$%972$NB&LL$KF~<M9k3H$b9M$(il$k!%$=$N>l9g!$;k@~7W;;$O;k@~$,F~<M7?%9%i%$%9(%N!<%I)$+$i;O$alP$h$$$3$H

KJ$k!%$=N?$a%l%s%@%j%s%0$N:G=i$KA4$F$N%N!<%I$O<+J,$N%N!<%I$KF~<M$9
$k;k@~>pJs$rCNkI,MW,$"$k!%

3F%N!<%I$N%T%/%;%kCM7W;;%f%K%C%H(PCU)$O!$AwilF-$?;k@~>pJs$rbH
$K;k@~CM7W;;$r9T$$!$<+%N!<%I$,C4Ev9k%9%i%$%9$G$N=hM}$,=*N;9k$H!$$=
$N7W;;7k2L$rNY@\%N!<%IE>Aw$7!$<!$N;k@~7W;;$r9T$&!%<!$K!$FCD'E*$J2DN
;k@~F~<M%Q%?!<%sKD$$$F=RYk!%;k@~$,%9%i%$%972$NDlLL$K?bD>$KF~<M$7$?
>l9g$O!$;k@~7W;;$O3=E2=$7$?>l9g$HF1MM$K!$@hF,%N!<%I$+$iC'<!E*$K:G8eHx
$N%N!<%I$XEAGE5lJ,$i9T$o$l!$:G8eHx$N%N!<%I$+$i%T%/%;%kCM$,=PNO5l
$k!%$^$?!$;k@~$,%9%i%$%972$NB&LL$K?bD>$KF~<M$7$?>l9g$O3F;k@~$OF~<M$7$?
%N!<%I$G:G8e$^$G7W;;$5$l!$F~<M7?%N!<%I$+$i=PNO5lk3HKJk!%3N
>l9g!$%T%/%;%kCM$OMM!9$J%N!<%I$+$i=PNO$5lk$?$a!$$3liNCMr=8ak%M%C
%H%o!<%/$,JL$KI,MWKJ$k!%

F1MM$NJ}<0$r:NMQ7F$$$kO@J8[16]GO$^$:3F;k@~$,%\%j%e!<%'6u4V$NI3
$KF~<M$9k+$r7W;;$9$k!%$=7FF~<ME@$r4^$'%9%i%$%9$rC4Ev9k%W%m%;%C%5
$K;k@~>pJs$,Awil$k!%$=$N8e3F%W%m%;%C%5$,F14|7F;k@~7W;;$r?J$a$F$$$/!%
3liN=hM}$r1%9%-%c%s%i%$%s4H$K%Q%$%W%i%$%s=hM}$r9T$$!$<B;~4V2D;k
2=$r9T$C$F$$$k!%

O@J8[16]GO;kLn3Q$d!$;kE@$N0LCV$r@)8B9k3H$G!$A4FN%W%m%;%C%5$,
F14|7FJBNs=hM}$r9T$$!$%O!<%I%j%"%k%?%$%'2D;k2=$r<B8=$7$F$$$k!%$=$N$?
$a!$@)8B$,<i$ilJ$$$H%7%9%F%'<+BN$,F0:n$7J/Jk9=@.KJCF$$$k!%2f!9
OO$=$Nh&$J@)8B$rGS=|$7!$%=%U%H%j%"%k%?%$%'%7%9%F%'$rL\;X$9!%2f!9$,
=RYk%=%U%H%j%"%k%?%$%'%7%9%F%'$G$O!$;kLn3Q$,Bg$-$/$JC?>l9gGb2D;k
2==hM}$N%9%T!<%I$,CY$/$Jk@1G!$2D;k2=$,G-J/Jk3HOJ$$!%

3.3.3 N>J}<0$NHf3S

K\9FGO*ReVolver*/C40Nh$&$K%\%j%e!<%'%G!<%?$N3=E2=$r9T$&J}<0$HO@
J8[16]Nh$&$K9ToJ$$J}<0KD$$$FHf3S9k!%N>J}<0K*1kFCD'$r0J2<$K
<($9!%

- 3=E2=9k>l9g
  $^$:!$3=E2=$9k?$a%a%b%jMFNL$,3G\I,MWKJ$k!%$^$?%7%_%e%l!<%7%g%s
  $+$iF@il$k%\%j%e!<%'%G!<%?$N99?7=hM}$K;~4V$,$+$+$k!%0lEY%G!<%?99
  ?7$,=*$k$H!$;kE@$,$I3K$"$CFb<B;~4V2D;k2=$,2DG=$G$"$k!%

- 3 =E2=7J$$>l9g

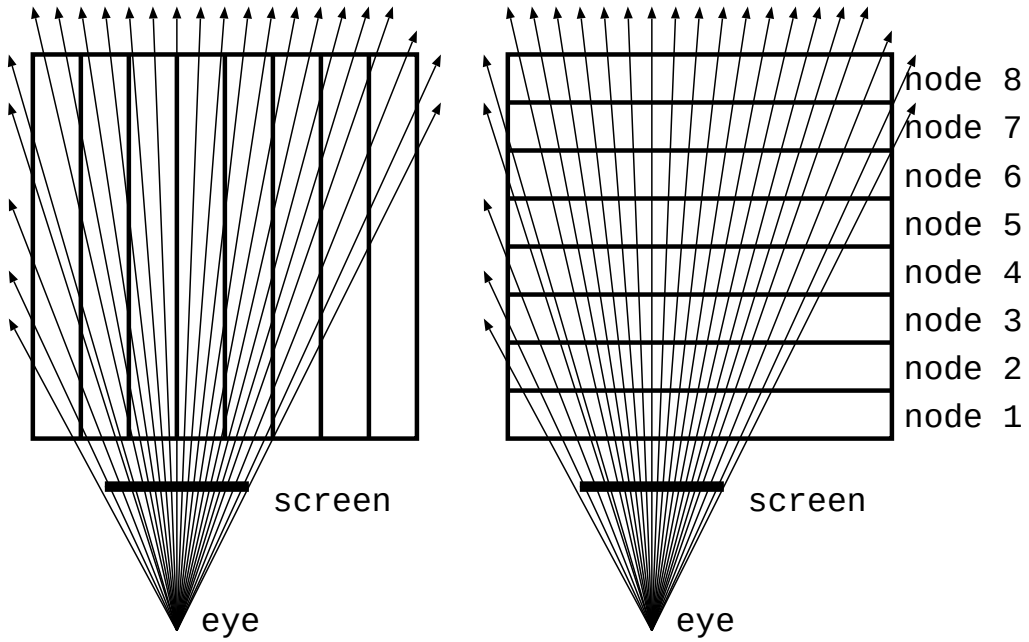

(a) %9%i%$%9$NB&LIB&$+$i$NF~<M (b) %9%i%$%9$ND lLIB&$+iNF~<M

or

3 =E2=7?>l9g

?^14: 3HBg7?;~$N3F%N!<%I$N;k@~L)EY

3 =E2=7J$$?$a%G!<%?99?7$OB.d+$K9T$olk!%7+$7?^14 Nh$&$K!$ %\%j%e!<% '%G!<%?$NFCD j$N2U=j$N2rA|EY$r>e2F!$3HBg$7$F4Q;!$7h&$H 7?>l9g$r9M$(kH!$3 =E2=7F$$J$$>l9g$OFCD j$N%N!<%I$K7W;;Ii2Y$, =8Cf7F7^$&!%?^14(a) $r8+$l$P!$L@i+$K1&C<$N%N!<%IKHfY$FCf1{ $N%N!<%I$NIi2Y$,9b$$3H,J,$+$k!%FC$KJB9TEj1F$7$?>l9g$OF);kEj1F$N ;~$Nh&K;k@~$,9-$,iJ$$?$a!$$h$j$$C=$&FCD j%N!<%I$K=hM}$,=8Cf 9k!% $^$?!$A4$F$N%N!<%I$+$i%T%/%;kCM$,=PNO5lk?$a!$$=li$r=8$a$FI= <($9k?aN%M%C%H%o!<%/bI,MWHJk!%

2f!9$OBg5,LO%G!<%?$N2D;k2=$rA0Ds$K7F$*$j!$%7%_%e%l!<%7%g%s$,$=$N$h $&$JBg5,LO$J%G!<%?$r@8@.9kNK$OB?$/$N;~4V$,$+$+$j!$%G!<%?$N99?7IQEY

O=l [$IB?$/$J$$H9M$ ($k!%$=N?$a%*%s%i%$%s2D;k2=K*$$F!$3=E2=$r 7F$b%G!<%?$N99?7;~4V$,$=l [$ILdBj$KJi$J$$H9M$ ($k!%

$^$?!$<!>O$G=RYk%W%j%U%'%C%A5!9=K*$$F$b3=E2=$7$?$ [$&$,%W%j%U%'%C %A7d9/8zN (Nh$$%W%j%U%'%C%A$,9T$ (!$2hA|$N@8@.B.EY$,B.$/Jk$H9M$ (il$k!%$=$N7k2L!$;kE@$r2?EY$bJQ$ ($F%\%j%e!<%'%G!<%?$r2r@O9k%*%U%i%$$ %s2D;k2=Nh$&$J>l9gGb!$l DN%G!<%?$+$iB?$/$N2hA|$rIA2h$9lP!$0lKg $"$?jN%l%$%F%s%7$OAjBPE*$K>.$5$/$JkH9M$ ($k!%

5i$K3+H/$K$"$?CF$b!$3F%N!<%I$@@.$5l?=PNO$r2s<}$9$k%M%C%H%o!< %/$rIU2C7J$/$F$h$$$3Hb$"$j!$<!>O0J9_$O%\%j%e!<%'%G!<%?$r3=E2=$9$k 3H$rA0Ds$H7F5DO@9k!%

3.4 %7%9%F%'9=@.

K\9'GO3l$^$G$NJ}?K8!F$$rF'$^$($?7A$G!$Ds0F$9$k%7%9%F%'$N9=@.$r@b L@$9$k!%Ds0F$9$k2D;k2=%7%9%F%'[4]$G$O!$N!_N!_L$N%5%V%\%j%e!<%'C10L$G JBNs2=$7!$%l%$%-%&%9%F%#%s%0%"%k%4%j%:%'$rMQ$$$F!$l%T%/%;%kJ,$N%T%/%;%k CM7W;;$r%5%V%\%j%e!<%'C10L$G%Q%$%W%i%$%s=hM}9k3H$GL\I8$H9kIA2hB. EY$rF@$k!%2D;k2=%7%9%F%'$N9=@.$H7F$O128%N!<%I9=@.$NPC%/%i%9%?$K!$%\ %j%e!<%'%l%s%@%j%s%08~$1%"%/%;%i%l!<%?(VisA:**Vis**ualization **A**ccelerator)[8] $rAuHw$7!$VisA 4V$rAPJ}8~9bB.%j%s%/$G@\B3$9$k!%7W;;7k2L$OVisA 4V%j%s%/ $HF10l5,3J$N%1!<%V%kKh$j%U%l!<%'%P%C%U%!$KAwil!$%G%#%9%W%l%$$XI=< (5l$k!%@8@.$5l?2<!8$52hA|$KBP$7F!$$5iK9bEY$J8e=hM}$,I,MW$J>l9g$O!$ %[%9%HPC KAwj=hM}$r9T$&!%

ReVolver/C40 GO!$;k@~@8@.!$%T%/%;%kCM7W;;!$%7%'!<%G%#%s%0$N3%9%F!< %8G=l>$l@lMQ$N%O!<%I%&%'%"$G9=@.$7?$,!$VisA GO%T%/%;%kCM7W;;N_ $r=EE@E*$K@lMQ%O!<%I%&%'%"2=$7!$$=$NB>$N%9%F!<%8GI,MWG$"$C$?=hM}$O3F PC $NCPU $dHFMQ%0%i%U%#%/%9%+!<%I$rMQ$$$F<B9T9k!%0J2<!$VisA $N<gMW 9=@.MWAG$K$D$$$F4JC1$K@bL@$r9T$&!%

- PC %/%i%9%?It128%N!<%I$NPC%/%i%9%?It$O!$;k@~@8@.=hM}$r9T$&$HHb $K!$%7%_%e%l!<%7%g%s$NJlBN$HJk.$3$3G@8@.5l$?%\%j%e!<%'%G!<%?$O PCI %P%9$r7PM3$7$F!$$=l>$l3F%N!<%I$KAuHw5l$?VisA KAwilk!%

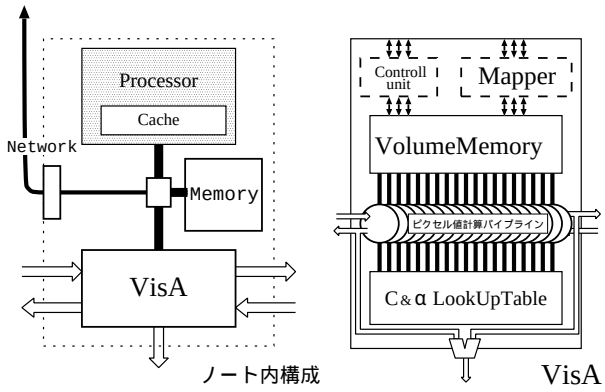

?^15: %N!<%I$HVisA

- VisA 4V%j%s%/

  3N%j%s%/$O%l%s%@%j%s%0%Q%$%W%i%$%s$K$*$$F7W;;ESCf$N?'>pJs!$F)L@EY>pJs!$Z CM$rAwk?aN%j%s%/G"$j!$%U%l!<%`%P%C%U%!$NF~NOB&%9%k!<%W%C%H$HF1MM1008MB/s $NE>AwB.EY$,I,MW$G$"$k!%3F%N!<%I$KNY@\%N!<%I4V$NAPJ}8~%j%s%/$H!$%U%l!<%`%P%C%U%!XN=PNO%]!<%H$r@_$1k3HG!$ReVolver/C40 GOBP1~$,:$FqG"C?<o!9$N%l%s%@%j%s%0%"%k%4%j:%`$KBP1~9k!%6qBNE*KODVI MQLVDS %$%s%?%U'!<%9$rMQ$$F%M%C%H%o!<%/$r9=@.$9$k!%

- %\%j%e!<%`%a%b%j

  %\%j%e!<%`%G!<%?$r3JG<$9$k$?$a$NMFNL2GB $N%a%b%j$G4000$^2$ \times 32 $N%5%V%\%j%e!<%`$r4 %;%C%H$^$G3JG<2DG=$H9k!%%N!<%IFb$N%T%/%;%kCM7W;;%f%K%C%H$KBP7F4GB/s $N%P%s%II}$r3NJ]9k$?$a!$PC600 5,3JAjEv$NRambus chanel 4 %A%c%M%k(9g7W4.8GB/s) $G9=@.$9$k!%

- %T%/%;%kCM7W;;%Q%$%W%i%$%s

  32 8D$NPCU $r%Q%$%W%i%$%s%K@\B3$7$F9=@.$9$k!%I=<(($KI,MW$JRGB $O8bit G"k,!$8m:9EAGE$N1F6A$r7Z8:$9k?$a16bit 8GDj>.?tE@$H7F?'$HF)L@EY$N1i;;$r9T$&!%%Q%$%W%i%$%s<~GH?t$O2hLI%5%$%:$H%U%l!<%`%l!<%H$+$i128MHz HJ$k!%3$NItJ,$N>\:Y$O8e$G=R$Y$k!%

- Look Up Table (C& &ALUT)

  RGB 3F8bit $N?'>pJs$H!$8bit $NF)2aN($rJ];}9k256 %(%s%H%j$N%k%C%/%"%C%W%F!<%V%k$G$"$k!%3F%T%/%;%kCM7W;;%f%K%C%H$,1 %\%/%;%k$N1i;;$r

9T$&EY$K1 2s;2>H5lk?$a!$%9%k!<%W%C%HE*KO%\%j%e!<% `%a%b%j$N4
G\$N@-G=$,MW5a$5lk$,!$>.MFNL$N%a%b%j$G$"$k$?$a!$%^%k%A%]!<%HRAM
$rJ#?tMQ$$F<BAu2DG=$H9M$(il$k!%

- @)8f%f%K%C%H$*$h$SMapper
  @)8f%f%K%C%H$O;k@~>pJs$r;OaH9kIA2h$K4X$9$k>pJs$rCPU $+$i<u$1
  <h$j!$VisA A4BN$N@)8f$r9T$&!%Mapper $OCPU B&$+iN%\%j%e!<% `%G!<
  %?$r<u$1<h$j!$%\%j%e!<% `%a%b%j$K3JG<$9$k!%%7%_%e%l!<%7%g%s7k2L$+$i
  $N%\%j%e!<% `%G!<%?$X$N%^%C%T%s%0=hM}$,Dj7?E*$+$D4J0WJbNG$"$l$P!$
  CPU B&GN%^%C%T%s%0=hM}$r>JN,$7!$Mapper $KD>@\%^%C%T%s%0=hM}$r9T
  o;k3HG9bB.2=$r?^$k3H$,$G$-$k!%3NL\E*N?aKMapper KO
  FPGA E*$J5!G=$r;}$?$;$k!%
- %W%j%U%'%C%A5!9=
  %\%j%e!<% `%a%b%j$O%Q%$%W%i%$%s9=@.$7$F$$$kA4FN%T%/%;%kCM7W;%f%K%C
  %H$+$iF1;~$K%"%/%;%9$5lk$?$a!$=jK>$N%Q%$%W%i%$%s<~GH?t$r<B8=$9$k
  $?$a$K!$LUT $H%\%j%e!<% `%a%b%j$N4V$K%W%j%U%'%C%A%P%C%U%!$rAuHw$7!$
  %\%j%e!<% `%a%b%jXN%"%/%;%9CY1d$KH<$&%Q%$%W%i%$%s%9%H!<%k$r:G>.2=
  9k.

Bh4>O VisA $NFbIt@_7W

VisA $rMQ$$?2D;k2=%7%9%F% 'N:G=*L\I8H7FO4000^{3}DxEY$NBg5,LO%\%j%e!<%'%G!<%?$r<B;~4V2D;k2=9k3HG"$k!%VisA $O@lMQASIC $G:n$k3H$rA0Ds$H7F$$k!%2f!9$O8=:_$=$N%W%m%H%?%$%WH7$FVisA Pro $N@=:n$r9T$&!%K\>O$GO^$:VisA Pro $N9=@.$r=RYk!%$=$N8e!$<BAu$9$k%W%j%U%'%C%A5!9=$K$D$$$F@bL@$7!$<B:]$K:n@.$7$?2sO)$K$D$$$F$N@bL@$r9T$&!%G8e$K@8@.7?2sO)$NF0:n<~GH?t$K$D$$$FJs9p9k!%

4.1 VisA Pro $N9=@.

VisA Pro $OVisA $N5!G=$r$\frac{1}{2}$$K=L>.7?bN$G!$4pK\E*$JF0:n$OVisA $HF1MM$G$"$k!%FbItGO16CJ9=@.$NPCU$,%Q%$%W%i%$%s=hM}$r9T$&!%^$?9bB.$JPCI%P%9$rMxMQ$9k3HG!$%7%_%&l!<%7g%s7O$+$iVisA XN%G!<%?E>Aw$r9bB.$K9T$&$3H,G-!$%G!<%?9?7$rB.d+$K9T$&3H$,G-$k!%^16 $KVisA Pro $N9=@.$r<($9!%VisA Pro $OFPGA ItJ,$H7FVirtex-II %7%k!<%:$NXC2V6000

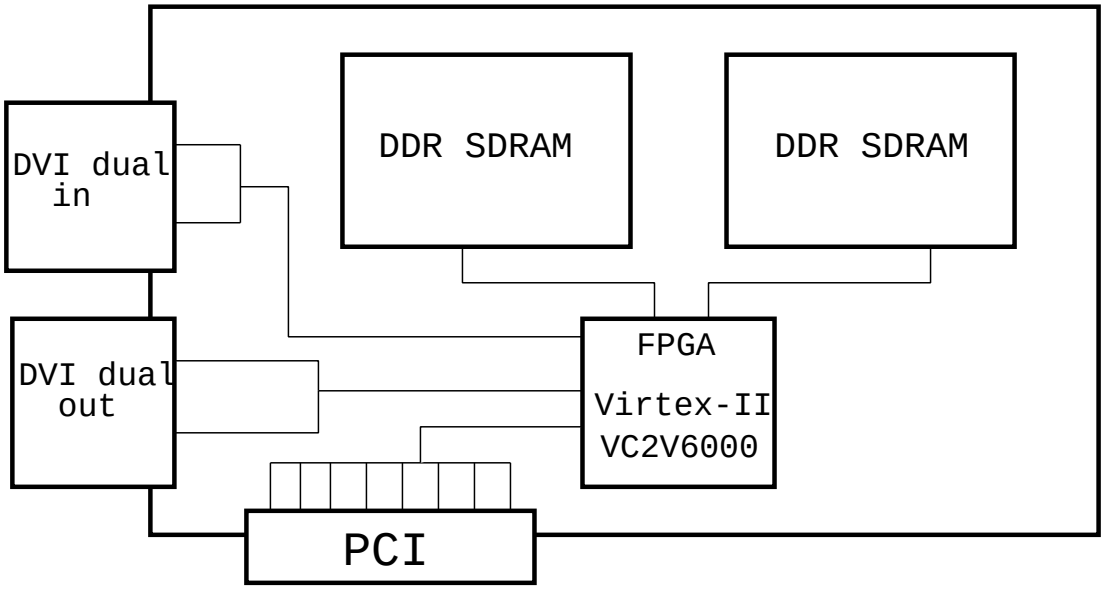

?^16: VisA Pro $N9=@.

%G%P%$%9$r:NMQ9k3H$r9M$($F$$k!%^$?!$Look up Table 5Z$S!$%W%j%U%'%C%A%P%C%U%!$OFPGA >e$N%*%s%A%C%W%a%b%j$r;H$C$F<BAu$9$k!%

2f!9$O8=:_VisAPro $N1/2DxEY$N%\!<%IH7$FE15~%(%l%/%H%m%s%G%P%$%93t<0

2q<R(TEL) $NTD-BD-DDR266 $H$$&Viertex-II/DDR-SDRAM I>2A%\!<%I$,
$"$kNG!3N%\!<%I$r;H$C$F%W%j%U%"%C%A5!9=$H!$PCU $N@_7W$r9TC?!%3$NI>
2A%\!<%I$OVirtex-II%7%j!<%:$NXC2V1000%G%P%$%9$HDDR SDRAM266$,0l4p
AuHw5l$F$$k!%XC2V1000%G%P%$%9$O<B:]$KVisA Pro $G;HMQ$9$kXC2V6000
$NH>J,<e$N@-G=G"$k!%$=N?$aXC2V1000%G%P%$%9>e$KPCU8CJ9=@.$N2sO)
$r<B8=$G$-$l$P!$5!G=$r2G\$K3HD%7FXC2V6000>e$K<BAu$G$-$k$H9M$($k!%

4.2 %\%j%e!<%"%a%b%j%"%/%;%9@)8f5!9=

K\@aGO%\%j%e!<%"%a%b%jXN%"%/%;%95!9=KD$$$F=R$Y!$%W%j%U%"%C%A$N
I,MW@-$H%W%j%U%"%C%AJ}?K$K$D$$$F=RYk!%

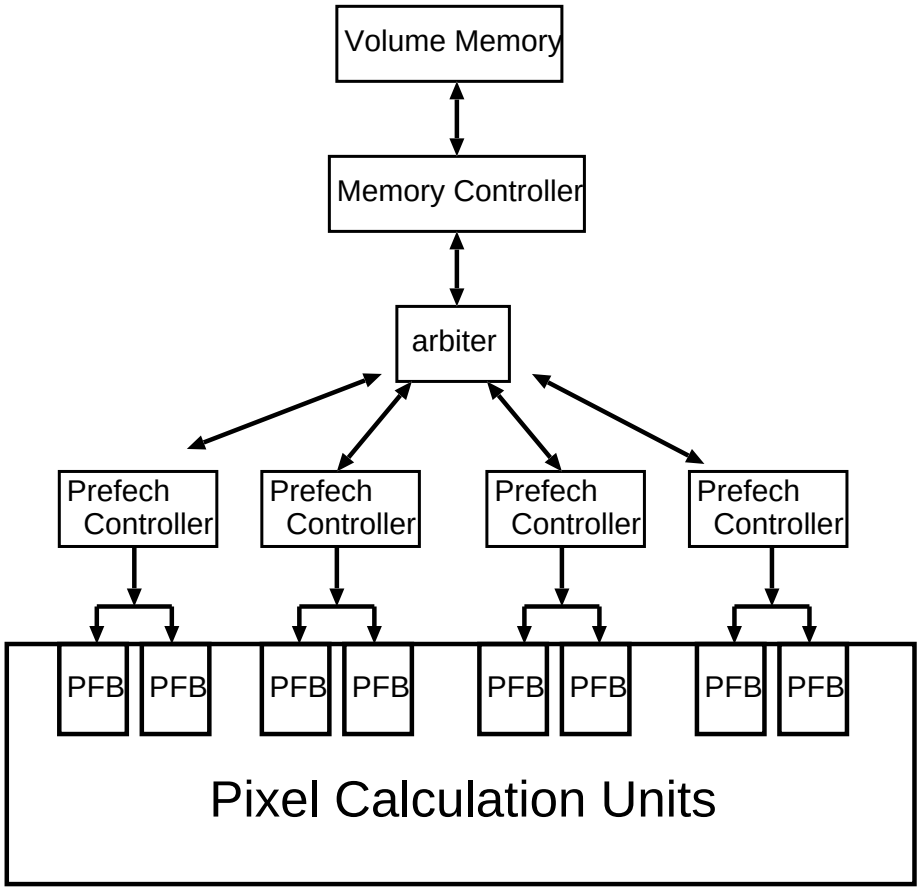

?^17: %\%j%e!<%"%a%b%j%"%/%;%95!9=

4.2.1 DDR SDRAM

Ek: \$5lF$$k%a%b%j$OMicron <R@=$NDDR SDRAM $G4M %P%s%/×8bit×4 %P%s%/$H$$&9=@.KJGF$$k!%O"B3FI$_=P$7$d=q$-9~$_$r9T$&4p=‘$HJk%P!< %9%HD9$O2!$1!$8 $N3<cN‘$,$"$j!$1EY$N%a%b%j%"%/%;%9%G$=$l$>$l:GBg16Byte!$ 32Byte!$64Byte FI$_=P$72DG=$G$"$k!%s^$?!$FI$_=P$7L?Na$rH/9T$7F+$i%G!< %?$,$G;O$^k^GKMW9kCAS %l%$%F%s%7$O!$P!<%9%HD9$Khi$:!$2 $^$?$O 2.5 %5%$%/%kG"$k!%s^$?%P!<%9%H%j!<%I$N:]$K%G!<%?r9YFFI$_=P$9$?$a$K $O%P!<%9%HD9/2 %5%$%/%k$+$+$k!%

4.2.2 %W%j%U%"%C%A$NL\E*!MW5a;EMM

K\%7%9%F%‘GO!$%\%j%e!<%‘%G!<%?$OCJ,3d5l%5%V%\%j%e!<%‘H7$F3F%N!< %I$KG[CV5l$F$$k3H$rA0Ds$K7F$$k!%3F%N!<%IKOJ#?t$NPCU $,B8:_ 7F$*$j!$3FPCU $rF1;~$KFO:n5;k?aK$O=$N%5%V%\%j%e!<%‘%G!<%?$r3F PCU $,F1;~$KFI$_=P$;kh$&$K7J$/$FOJiJ$$!%s7+$7!$VisA $N9=@.$h $j0l$D$N%\%j%e!<%‘%a%b%j$KJ#?t$NPCU $+$i$NF1;~%"%/%;%9$,I,MWHJ$k!%\ %j%e!<%‘%a%b%j$NINHVCO$r%"%/%;%9$9k+I&$+$O;k@~>pJs$+$i7hDj5l$k!% $=$N$?$a%W%j%U%"%C%A%P%C%U%!$rPCU J,MQ0U$7!$%W%j%U%"%C%A%3%s%H%m!<%i$, ;k@~>pJs$r2r@O$7$F!$I,MWKJ$k%G!<%?$r$"$i+$8%\%j%e!<%‘%a%b%j$+$i%W%j %U%"%C%A%P%C%U%!$K%U%"%C%A7F$*$/!%$=$7$FPCU $+$i$N%G!<%?$N%"%/%;%9$O A4$F%W%j%U%"%C%A%P%C%U%!KBP7F5lk3HH9$k!%

4.2.3 %V%m%C%/C10L$N%W%j%U%"%C%A

VisAPro GO!$DDR SDRAM $N%9%k!<%W%C%H$r:GBg8BH/4x7J$$$H!$L\I8$H 9kFO:n<~GH?t(128MHz) $r<B8=$9k3H,G-$J$$!%=N?$aDDR SDRAM $N%P!<%9%HE>Aw$r3hMQ7FFI$_=P$7$r9T$&I,MW$,$"$k!%=$3$G%5%V%\%j%e!<%‘ 6u4V$r%V%m%C%/C10L$G9=@.$7!$%W%j%U%"%C%A$9$k:]$K$O%P!<%9%H%j!<%I$rMxMQ 7F%V%m%C%/C10L$G%W%j%U%"%C%A$9$k!%0J2<$GO3$N%V%m%C%/$N3H$r!‘C10L %V%m%C%/!W$H8F$V!%

%W%j%U%"%C%A5!9=$r@_7W$9k?aK7hakY-3H$O<!$N3DG$"$k!%

- DDR SDRAM $N%P!<%9%HD9
- C10L%V%m%C%/$N7A>u
- %W%j%U%"%C%A%3%s%H%m!<%i$N?t

<!9‘GO>e5-$N3$DKD$$$F9M;!$r9T$&!%

4.2.4 9M;!

- DDR SDRAM $N%P!<%9%HD9

  %P!<%9%H%j!<%I9k$?$aKO%P!<%9%HD9/2 $N%5%$%/%k$G;k@~7W;;$r9T$$!$
  %a%b%jKBP7$F%j!<%IMW5a$r=P5J$/$FOJiJ$$!%%P!<%9%HD9$,2 $@$H
  Kh%5%$%/%k;k@~7W;;$r40N;5;J/FOJi$J$$!%5U$K%P!<%9%HD9$,D9$$
  $H!$%W%j%U%'%C%AG-$k;~4V4V3V$,9-$/$J$j!$%W%j%U%'%C%A7?%G!<%?$NMx
  MQN($,2<$,CF7^$&!%$^$?!$%Q%$%W%i%$%s;_$^$C$?>19g$KG-k@$1Aa
  $/F0:n$,:F3+G-kh$&K$9kK$O%P!<%9%HD9$rC;$/$7$?$[$&$,$h$$!%

- %W%j%U%'%C%A%3%s%H%m!<%i$N?t

  %W%j%U%'%C%A%P%C%U%!$OPCU Kh$K@_1kI,MW$,$"$k!%$7$+$7#1DN%W%j
  %U%'%C%A%3%s%H%m!<%i$,J#?t$N%W%j%U%'%C%A%P%C%U%!$r@)8f$7Fb$+$^oJ
  $$!%3N>19g!$%\%j%e!<%'%a%b%j$+iFI_=P$9C10L%V%m%C%/$rJ#?t$N>.%V
  %m%C%/(0J8e3N>.%V%m%C%/N3Hr!VtJ,C10L%V%m%C%/!W$H8F$V(?^18;2
  >H)) $KJ,3d$7$F!$3F%W%j%U%'%C%A%P%C%U%!KOItJ,C10L%V%m%C%/4H$K%G!<
  %?$r3JG<$9$k!%J#?t$N%W%j%U%'%C%A%3%s%H%m!<%i$O%\%j%e!<%'%a%b%j$K%"
  %/%;%9$r9T$&:]K*8_$$$,6%9g9k$,!$$3$N6%9g$O%"!<%S%?$G2r>C$9$k!%l

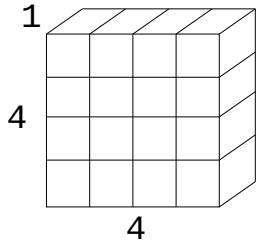

?^18: $4 \times 4 \times 1$ $NItJ,H>C10L%V%m%C%/

DN%W%j%U%'%C%A%3%s%H%m!<%i$,J#?t$N%W%j%U%'%C%A%P%C%U%!$rC4Ev$9k3
HG!$%W%j%U%'%C%A%3%s%H%m!<%i$N?t$,8:$j!$%W%j%U%'%C%A%3%s%H%m!<%i$I
$&$7$N6%9g$r4KOB9k3H$,$G$-$k!%=N?$a!$%W%j%U%'%C%A%3%s%H%m!<%i
$,%\%j%e!<%'%a%b%j$KMW5a$r=P$7$?8e!$<B:]$K%\%j%e!<%'%a%b%j$+$i%G!<
%?$,E>Aw$5lk$^$G$N;~4V$r:o8:9k3H$,$G$-$k!%

- C10L%V%m%C%/$N7A>u

  %P!<%9%HD9$,4(32 8DJ,)) $N>19g$G$OC10L%V%m%C%/$N7A>u(D>J}BN!KtON)
  J}BN)H7FO(1×1×32),(1×2×16),(1×4×8),(2×2×8),(2×4×4) NAH_9g

o;$,9M$ (il$k!%

VisA GO*ReVolver*/C40 $HF1MM$K2.1.2 @a$G=R$Y$?$h$&$J%\%/%;%kJBNs=h M}$G%T%/%;%kCM7W;;$r9T$&!%%\%/%;%kJBNs$G$O3FPCU $O<+J,$,C4Ev9k%9 %i%$%9$KBP7FKN$_%"%/%;%9$9k?$a!$ItJ,C10L%V%m%C%/$N<g<4J}8~$N I}OI,MWJ$!%$=N?$aItJ,C10L%V%m%C%/$N7A>uH7FOOX $\times$ Y $\times$ 1 $H $$$&7A>u$,E,Ev$G$"$k$H9M$ (il$k!%

2f!9$O!$%P!<%9%HD9$rC;$/$7!$$5iK;k@~7W;;~4V$KM>M5$rb?$;$k$?$a$K%P!< %9%HD9$O!"V!WH7!$%\%j%e!<%"%a%b%j$+iO1 2s$N%"%/%;%9$G2$\times$4$\times$4 $ND>J}BN 7A>u$NC10L%V%m%C%/rFI_=P$9$3HK9k!%5iK=$NC10L%V%m%C%/$r4 $\times$ 4 $\times$ 1 $N2 DNH>C10L%V%m%C%/HKJ,3d$7!$$=l>$l2 DNNY@\$9$k%W%j%U%"%C%A%P%C %U%!$K3JG<9k!%

4.2.5 %"!<%S%?

%W%j%U%"%C%A%P%C%U%!$+$i%\%j%e!<%"%a%b%jXN%"%/%;%9$r@)8f$9k?$a!$%"!< %S%?$rMxMQ$9$k!%F);kEj1F$G$O!$;k@~$N9-$,j,Bg$-$$$[$I%W%j%U%"%C%A$7$? %G!<%?$NMxMQ8zN($,0-$/Jk!%$=$N7k2L%W%j%U%"%C%A%3%s%H%m!<%i$OIQHK$K%G!< %?$rMW5a$9kh$&$KJk!%$=$3$G!$3F%W%j%U%"%C%A%3%s%H%m!<%i$KM%@hEY$r@_ $1!$VisA Fb$N%l%s%@%j%s0=hM}$G8eJ}$N%W%j%U%"%C%A%P%C%U%!$r@)8f9k%W%j %U%"%C%A%3%s%H%m!<%i$[$IM%@hEY$r9b$/9k!%$^$?!$M%@hEY$,Dc$$%W%j%U%"%C%A %3%s%H%m!<%i$N:G0-BT$A;~4V$rJ]>Z$9k?aK!$%9%?%Y!<%7%g%s%U%j!<$G$"$k I,MW$,$"$k!%

4.2.6 %W%j%U%"%C%A$NF0:n

%W%j%U%"%C%A$O%W%j%U%"%C%A%3%s%H%m!<%i$,@)8f$9$k!%W%j%U%"%C%A%3%s%H%m!< %i$O!$PCU GI,MWHJk%\%/%;%kCM$N%"%I%l%9$r!$;k@~>pJs$r;HCF@hFI$_$9 $k!%$=7FI,MWHJ$k%G!<%?$,4{$K%W%j%U%"%C%A%P%C%U%!$KB8:_7F$$$k$+$I $&$+$rH=Dj$9$k!%B8:_$7J1lP!$%"!<%S%?$K%\%j%e!<%"%a%b%jXN%"%/%;%9 8"$rMW5a$9$k!%%"%/%;%98"$,M?$($il?%\%j%e!<%"%a%b%j$+$i=jK>$N%\%/%; %k$r4^$`C10L%V%m%C%/$rFI$_@$7!$$=lr2 DNItJ,C10L%V%m%C%/H7$F@)8f 7F$$k2 DN%W%j%U%"%C%A%P%C%U%!$K3JG<$9$k!%

4.2.7 ;k@~$N9-$,jKKh$kMxMQN($NDc2<

PCU $OKh%5%$%/%k%G!<%?rI,MWH9k!%PCU $N?t$,P BfG"lP!$l %5%$ %/%k$"$?$j9g7W$GP %P%$%H$N%G!<%?rI,MWH9k!%$=$N$?aPCU $,8 8D$N>l 9g$O1 %5%$%/%k$"$?$j8 %P%$%H$N%G!<%?$,I,MWG"$k!%P!<%9%H%j!<%I$r7$?

:]$NDDR SDRAM $N%P%s%II}$O!$l %5%$%/%k$"$?$j16 %P%$%HG"$k!%$=N?$a!$8zN(h/%W%j%U%'%C%A$7%G!<%?$NMxMQN($,9b$1lP!$%a%b%j%P%s%II}$OB-jF$$k!%

7+$7!$;kEj1FK*$$F;k@~$,9-$,kH;k@~4V3V$,Bg$-$/$J$k!%$=$N7k2L%W%j%U%'%C%A8zN($,0-$/$Jk?$a!$%W%j%U%'%C%A%P%C%U%!KI,MWJ%G!<%?$,$J$3NN($,9b$/$J$k!%$=$N7k2L!$%W%j%U%'%C%ABTAKJj!$%Q%$%W%i%$%s$,@5>o$KF0:n$7J/Jk$H$$&LdBjE@$,$"$k!%

Nc$($P%W%j%U%'%C%A8zN($,1/4 KMnA$?>19g!$l6 8D$N%\%/%;%k%G!<%?$r%W%j%U%'%C%A7F$-Fb4 8D7+;2>H$5lJ$$!%$=$N$?$a%W%j%U%'%C%A%P%C%U%!$O4%5%$%/%k4H$K<!$NC10L%V%m%C%/$rMW5a$9kI,MW,$"$k!%$B>$N%W%j%U%'%C%A3%s%H%m!<%iK*$$F$bF1MM$N8:>/$,5/$3$k!%$=$N7k2L!$A4FN%W%j%U%'%C%A3%s%H%m!<%i$,%"!<%S%?$KMW5a$r=P$7B3$1$k>uBVKJ$k!%$3Nh$&$J>uBVGO!$0lEY%\%j%e!<%'%a%b%j$+$i%G!<%?$rFI$_=P$7$?8e!$<!KFI_=P$72DG=$HJkNO8%5%$%/%k0J>e8e$KJCF7$^$&!%3N8=>]$,B3$/$H!$$h$j0lAX0-=[4D$KJCF7$^$&!%$=$3$GK\9'$G$O!$;k@~4V3V$,9-$,kH$=$lKDlF%\%j%e!<%'6u4V$N30$K=P$F!$%T%/%;%kCM7W;r7J/Fb$h$$;k@~$,A}$(k3HrMxMQ7F3NLdBj$r2r7h$9k3Hr9M$($k!%

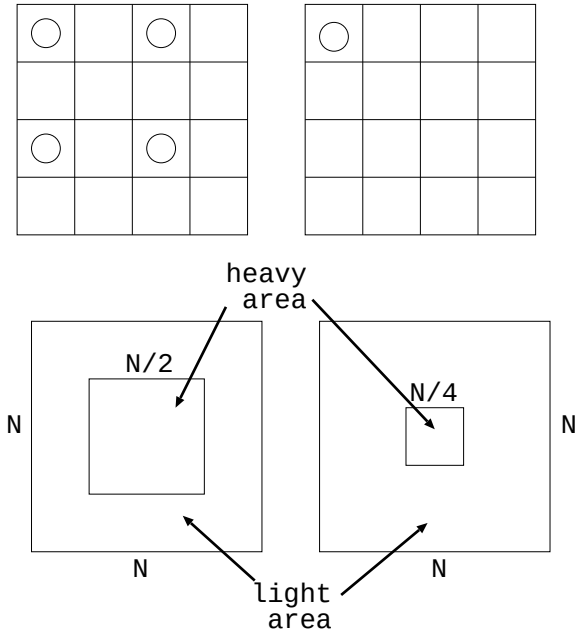

?^19: light ;k@~NN0h$Hheavy ;k@~NN0h

; k@~4V3V$,Bg$−$/$JkKDl$F!$%\%j%e!<%‘6u4V$N30B&$K=P$?; k@~$O3FPCU $rDL2a$9k,!$%\%j%e!<%‘%G!<%?; 2>H$r9kI,MW$,$J$$?$a!$<!!9$K%Q%$%W%i %$%s$rDL2a7F$$/!%3Nh&$J; k@~$r!$%\%j%e!<%‘%a%b%j$KBP9kIi2Y$,7Z $$3H+$i !Ẅght ; k@~!W$HhV!%$=$lKBP7$F%9%/%j!<%s$NCfl{IU6a$rDL2a$9 $k; k@~$G!$:G8e$^$G%\%j%e!<%‘6u4VFb$KB8:_7DE1!$$7$+$b%W%j%U%”%C%A$7 $?%G!<%?$NMxMQN($, 1/n KJ$k; k@~$,B8:_9k!%3Nh&$J; k@~$r!$%\%j%e!< %‘%a%b%j$KBP9kIi2Y$,Bg$−$$3H+$i !$\frac{1}{n}$heavy ; k@~!W$H8F$V!%$\frac{1}{n}$heavy ; k@~ $N?t$On NCM,Bg$−$/JkKDlF8:CF$$$−$\frac{1}{n}heavy$; k@~$OA4BN$N$\frac{1}{n}$ DxEY$K Jk$H9M$(Bil$k!%D^$j; DjN$(1 !<$\frac{1}{n}$) K\$Olight ; k@~G"$k!%

heavy ; k@~$,%G!<%?BT$AGH$^$C$F$$k4V$Klight ; k@~$N>pJs$,F~$CF−$?$i light ; k@~MQ$NFIFO $KF~$j!$heavy ; k@~$N$;$$$G%Q%$%W%i%$%s$,$H$^$j!$=PNO$, GJ$>l9g$Olight ; k@~MQ$NFIFO $+$i=PNOr@$7!$; k@~7W; ;$,$J$+$J$+?J$^$J $$heavy ; k@~$rDI$$L$+$7$F$$/9=@.K9$k!%$bAm$sheavy ; k@~$N=PNO$,$G $k>l9g$O$=$AirM%@h7F=PNO5;$k!%$3Nh$&$K9k3H$G0lHV:G=i$Kheavy ; k@~%(%j%"$KF~$C$?; ~$O7Pi/=PNO$,$GF3J>uBV$,B3$/$,!$$=$l0J9_$O heavy ; k@~NCYl$rlight ; k@~$,1#JC9k7A$G<!!9$H=hM}$,?J$‘3HKJ$k!%

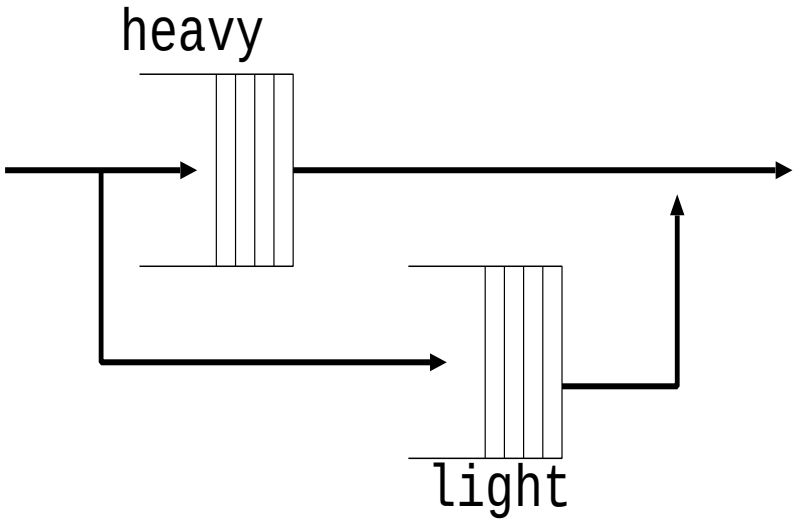

?^20: light ; k@~$N%P%$%Q%9

6qBNE*$JF0:n$r?^21 $rMQ$$$F@bL@9k!%?^21 GO1 $+$i10 $^$G$N10K\$N ; k@~KD$$$F9M$(B$k!%$l $+$i5 $^$G$N; k@~$Oheavy ; k@~$G!$6 $+$i10 $^$G$N; k @~$Olight ; k@~G"$k!%heavy ; k@~$OF~NO5l$?; ~E@$G%W%j%U%”%C%A%P%C%U%!$K

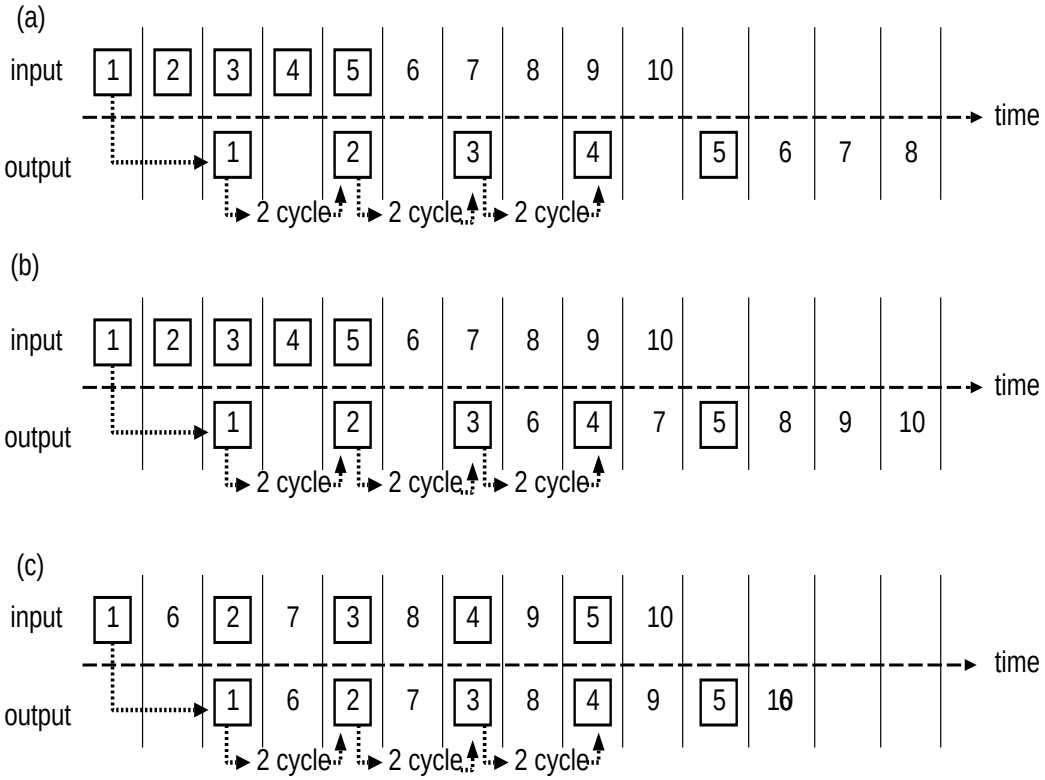

?^21: F~=PNO$N%?%$%_%s%0

%G!<%?$,$J$$$?$a!$%\%j%e!<%'%a%b%j$K%"%/%;%9$7$F%G!<%?$r%U%'%C%A9kNK2%5%$%/%k$+$+$k$H2>Dj$9$k!%$^$:!$?^21(a)Nh$&$Klight;k@~$N%P%$%Q%9J7$G!$heavy;k@~$,O"B3$7$FF~NO$5l=$N8e!$light;k@~$,O"B3$7$FF~NO$5lk>l9g$r9M$($k!%

;k@~1$N>pJs$O%W%j%U%'%C%A%P%C%U%!KJ$/!$F~NO5lF+$i2%5%$%/%k8e$K%G!<%?$,B7$&!%W%j%U%'%C%A%3%s%H%m!<%i$O;k@~1$GI,MW$J%G!<%?$r%U%'%C%A$7=*$okH<!$N;k@~2$r8+$k!%;k@~2$b$^$?%W%j%U%'%C%A%P%C%U%!KJ$$$NG^$?2%5%$%/%k$+$1$F%G!<%?$r%U%'%C%A$7!$$=$N8e;k@~2$N%G!<%?$,B7$&!%3Nh$&$Kheavy;k@~$,O"B3$7$FE~Ce$9kH!$%G!<%?$N%U%'%C%AK;~4V$,$+$+$k$?$a8eB3$Nlight;k@~$b$^$?5$1$k3HKJ$k!%

<!$K!$;k@~$NEjF~=g=x$O(a)$N>l9g$HF1MM$G"$k$,!$light;k@~$N%P%$%Q%9$rMQ$$$?>l9g$r?^21(b)$K<($9!%3$N>l9g!$light;k@~$O7W;;7J$/!$%G!<%?%A%A9kI,MW$,$J$$$?$a!$heavy;k@~$,=PNO$5lF$$J$9g4V$K=PNO7F7^$&$3H,G-$k!%5$i$K;k@~$NEjF~J}K!$r9)IW$7!$?^21(c)$Nh&$Klight;k@~$H heavy;k@~$,8r8_$KE~Ce9kH5iK%9%'!<%:$K;k@~$rN.$9$3H,G-kH9M

$ (il$k!%

3Nh&K7$F!$light ;k@~$N%P%$%Q%95!9=$rMQ$$!$$5iK;k@~$NEjF~=g=x$r 9)IW9k3H$G;k@~$N9-$,$jKBP9$kLdBjE@$r2r7hG-$k!%

4.3 %T%/%;%kCM7W;;ItJ,$N@_7W

K\@aGO%T%/%;%kCM7W;;ItJ,$N@_7W$K$D$$$F=RYk!%%T%/%;%kCM7W;;HO2.3 @a$N<0(3)!$(4) $G<($5l?7W;;N3Hr;X7F$*$j!$$3$N7W;;$r9T$&2sO)$r<B Au9k!%K\@aGO$^$:!$7W;;$KMxMQ9kVirtex-II $N9bB.>h;;4o$K$D$$$F=R$Y!$ $=$N8eVisA FbIt$N<gMW$J%b%8%e!<%kKD$$$F@bL@9k!%

4.3.1 BRAM $H9bB.>h;;4o

%V%m%C%/RAM(BRAM) HO18Kb $N%V%m%C%/C10L$GVirtexII %G%P%9KB??t Ek:\$5lF$$$k%G%e%"%k%]!<%HRAM $G!$9bB.%a%b%jH7$F;HMQ$9k3H,$G $-$k!%3N%a%b%j$O18Kb $N5-21NN0h$H!$40A4$KFHN)7?2 DN%"%/%;%9%]!< %H(A $*$h$SB) $+$i9=@.5l$F$$$k!%

%G!<%?$N=q$-9~$_$O$$:l+1 DN%]!<%H!$%G!<%?$NFI$_=P$7$OF1$8%]!<%H $^$?$O1 DN%]!<%H$+$i9T$&$3H,G-$k!%3F%]!<%H$O!$$=l>lN%/%m%C%/!$ %/%m%C%/%$%M!<%V%k!$%i%$%H%$%M!<%V%k$KF14|$9$k!%$^$?FI$_9~$_$bF14|$r<h$C $F9T$olkNG!$%/%m%C%/%(%C8$,I,MWG"$k!%

<!$K!$9bB.>h;;4oHOVirtexII B??tAuHw5l$F$$$k18bit×18bit $N2 $NJd?t %(%s%Y%G%C%I@0?t>h;;4oN3Hr;X$9!%3F>h;;4o$OBRAM $HG[@~%j%=!<%9$r6& M-7F$$$k$?$a!$8zN($N$h$$7W;;$,2DG=$G$"$k!%7+$b!$F1$8G[@~$r;HMQ7F $$kNKb+$+$oi:!$BRAM $N%G!<%?I}$,18bit 0J2<G"lP!$BRAM HO 40A4$KFHN)$KF0:n$7!$BRAM $K43>D$9k3H,$J$$!%8@$$49$($k$H!$BRAM %a %b%j$N%G!<%?I}$,18bit $rD6$($k>l9g$O!$$=$NBRAM $HG[@~%j%=!<%9$r6&M-$7 $F$$$k9bB.>h;;4o$O;HMQ$9k3H,G-$J$$$3HKJk!%

$^$?!$$3$N>h;;4o$O9bB.@-$r=E;k$7$F:GE,2=$5lF$*$j:GBg210MHz GNF0 :n$,2DG=$G$"$k!%<BAuK*$$F$O!$$3$N>h;;4o$rG-$k8B$j3hMQ$79bB.@-$r9b aF$$$/3H$H9$k!%

7+$79bB.>h;;4o$O?t$K@)8B$,$"$j!$%T%/%;%kCM7W;;ItJ,$N2sO)$N@_7W$K$" $?$GFO!$$G$-$k@$1>h;;4o$N?t$r8:>/$5$;$kh&$K9)IW$7J/FOJi$J$$!% <!9`G=$N9M;!$r9T$&!%

4.3.2 7W;;<0KD$$F$N9M;!

<0(3) GO!$2C;;1 2s!$8:;;1 2s!$>h;;2 2s!$<0(4) GO>h;;1 2s$N7W;;$,I,MWHJ$k!%$C_kHT_k$0lCJJ,$N7W;;$r%Q%$%W%i%$%sJ}<0$G@V,NP,@D(0J2<!$$=l>lR,G,BH8F$V)3?'J,$N7W;;$rF1;~$K9T$&$?aK$O>h;;4o$O7W7 8DI,MWHJ$k!%$^$?3F1i;;$r1 %5%$%/%k$G<B9T9k$H4 %5%$%/%k$+$+$k!%

<0(3) $OF)L@EYt $HN_@QF)L@EYT $rMQ$$$?<0G"C?!%F)L@EYt $HITF)L@EY$\alpha$ O\alpha = 1 - t$ $H$$$&4X78$,$"$k!%F1MM$KN_@QF)L@EYT $HN_@QITF)L@EYA OA = 1 - T$ $H$$$&4X78$,$"$k!%=$N$?$a!$<0(3) $NJQ7A$H7F<!$N3 DN>19g$,9M$(il$k!%

- ITF)L@EYα $HN_@QITF)L@EYA $r;HMQ
- ITF)L@EYα $HN_@QF)L@EYT $r;HMQ
- F)L@EYt $HN_@QITF)L@EYA $r;HMQ

0J2<GO<0(3) $r=|$/3 DN>19gKD$$FI,MW$J>h;;4o$N?t!$5Z$S1 %\%/%;%k$N7W;;$K$+$+$k%5%$%/%k?t5aak!%

- ITF)L@EYα $HN_@QITF)L@EYA $r;HMQ

  ITF)L@EYα!$5Z$SN_@QITF)L@EYA $rMQ$$$k$H<0(3)!$(4) $O<0(8)!$(9) Nh$&$KJQ7A5l$k!%

$$C_k = C_{k-1} + \alpha(v_i) \cdot c(v_k) \cdot (1 - A_{k-1}) \tag{8}$$

$$A_k = A_{k-1} + \alpha(v_k)(1 - A_{k-1}) \tag{9}$$

  3N>19g!$$\alpha(v_k)(1 - A_{k-1})$$,3F<0$G6&DL$G$"$k3H$rMxMQ$9kH!$R,G,B,ITF)L@EY$N7W;;$r9T$&$?$a$K!$>h;;4o$O4 DG$h$$$3HKJk!%$^$?!$%5%$%/%k?t$O4 %5%$%/%k$HJQ2=$,$J$$!%

- F)L@EYt $HN_@QITF)L@EYA $r;HMQ

  F)L@EYt $HN_@QITF)L@EYA $rMQ$$$k$H<0(3)!$(4) $O<0(10)!$(11) Nh$&$KJQ2=Jk!%

$$C_k = C_{k-1} + (1 - t) \cdot c(v_k) \cdot (1 - A_{k-1}) \tag{10}$$

$$A_k = 1 - t(v_k) \cdot (1 - A_{k-1}) \tag{11}$$

  3N>19g$O!$$(1 - A_{k-1})$$,3F<0$G6&DL$G$"$k3H$rMxMQ$7Fb!$R,G,B,ITF)L@EY$N7W;;$r9T$&$?$a$K!$>h;;4o$O7 DI,MWKJk!%$^$?!$%5%$%/%k?t$b4 %5%$%/%k$HJQ2=$,$J$$!%

- ITF)L@EYα $HN_@QF)L@EY$T$ $r;HMQ

  ITF)L@EYα 5Z$S!$N_@QF)L@EYT $rMQ$$$H!$<0(3)!$(4) $O<0(12)!$(13) Nh $&$KJk!%

$$C_k = C_{k-1} + \alpha(v_i) \cdot c(v_k) \cdot T_{k-1} \tag{12}$$

$$T_k = T_{k-1} - \alpha(v_k) \cdot T_{k-1} \tag{13}$$

  <0(12)!$<0(13) GO!$$\alpha(v_k) \cdot T_{k-1}$ $N7W;;$,6&DL7F$$k3H$rMxMQ$9$k $H!$R,G,B, I,MW$J1i;;?t$O!$>h;;4 2s$HJC$?!%$^$?!$l CJ$N7W;;$b3 %5 %$%/%k$G9T$&$3H,2DG=G"$k.

0J>e$N9M;!$h$j2f!9$O>h;;4o$N?t!$5Z$S7W;;$KMW9k%5%$%/%k?t$,:G$b>/$J $$!$ITF)L@EY$\alpha$ 5Z$S!$N_@QF)L@EYT_k $rMQ$$$?7W;;J}<0$r:NMQ$9$k!%

4.4 <BAu

4.4.1 PCU

A09'$N9M;!$h$j!$<0(12) 5Z$S!$(13) $N7W;;$r9T$&2sO)$r:n@.9k!%0J8e3N 0lCJJ,$N7W;;$r9T$&%b%8%e!<%k$rPCU $H8F$V!%

PCU FbIt$O%Q%$%W%i%$%sJ}<0$HJC$F$$$k$,!$<0(12) $N1 9'L\$H2 9'L\$N2C ;;$O<!$NPCU Fb$G7W;;$5$;$k3H$G!$PCU Fb$N%Q%$%W%i%$%sCJ?t$r2 K9$k 3H$,G-2D;k2==hM}$N%l%$%F%s%7$r>/J/7?!%0lK\$N;k@~7W;;$NMM;R$r?^ 22 $K<($9!%

<!$KPCU $NF~NO%]!<%H!$5Z$S=PNO%]!<%H$K$D$$$F@bL@9k!%

- F~NO
  - alpha

    7W;;BP>]HJ$k%\%/%;%k$NITF)L@EY$\alpha(v_i)$.
  - Tk_1

    7W;;A0$^$G$NN_@QF)L@EY$T_{k-1}$.
  - cr,cg,cb

    7W;;BP>]HJ$k%\%/%;%k$N%+%i!<CM $=$l$>$lR,G,B $KBP1~$7$F$$$k!%
  - sr_pre, sg_pre, sb_pre

    A0CJGN%+%i!<CM$N7W;;7k2L!%$=l>$lR,G,B $KBP1~$7$F$$$k!%<0(12) N\alpha(v_i) \cdot c(v_k) \cdot T_{k-1}$ $N7W;;7k2L$KAjEv9k!%
  - Ckr_1, Ckg_1, Ckb_1

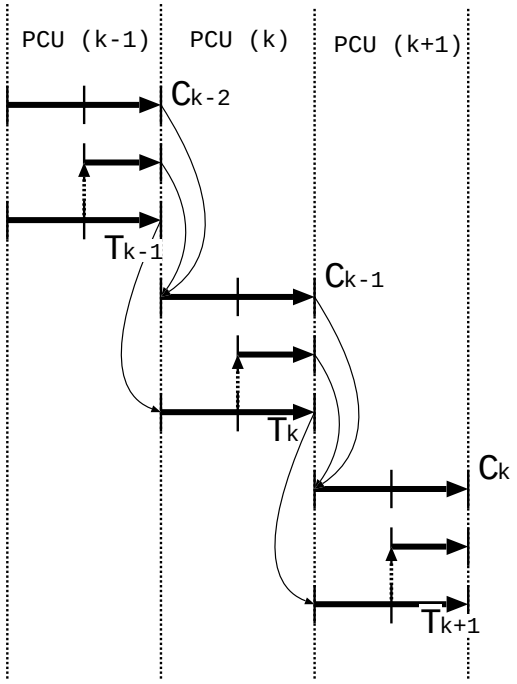

?^22: PCU Fb$N;k@~7W;;$NMM;R

A0!9CJ$^$G$NN_@Q%+%i!<CM!%$=l>$lR,G,B $KBP1~$7$F$$k!%3NCM $KA0CJ$G$N7W;;7k2L$G$"$k!$sr_pre, sg_pre, sb_pre $r2C;;$9$k!%

- clk

  %7%9%F%`%/%m%C%/!%

- =PNO
  - Tk

    3NCJ$^$G$NN_@QF)L@EY$T_k$ $NCM

  - sr, sg, sb

    3NCJGN%+%i!<CM$N7W;;7k2L!%$=l>$lR,G,B $KBP1~$7$F$$k!%<0

    (12) N\alpha(v_i) \cdot c(v_k) \cdot T_{k-1}$ $N7W;;7k2L$KAjEv9k!%3NCM$HN_@Q%+%i!<CM$H$N2C;;$O<!NCJGJ5lk!%

  - Ckr, Ckg, Ckb

    A0CJ$^$G$NN_@Q%+%i!<CM!%$=l>$lR,G,B $KBP1~$7$F$$k!%C_{k-1} $KAjEv$9$k!%

PCS $N9=@.$r?^23 $K<($9!%%+%i!<7W;;$O3?'$H$bF1MM$G$"$k$?$a!$?^$K$O2?'J,$O>JN,7?!%$C_{k-1} + S_{pre}$ $N7W;;$N8e!$carry$,b71G"lP!$%+%i!<CM$O%*!<%P!<%U%m!<7F$$k$?$a!$C_k <= "1111111111111111"H9$k2sO)$bIU?o

7F$$k!%

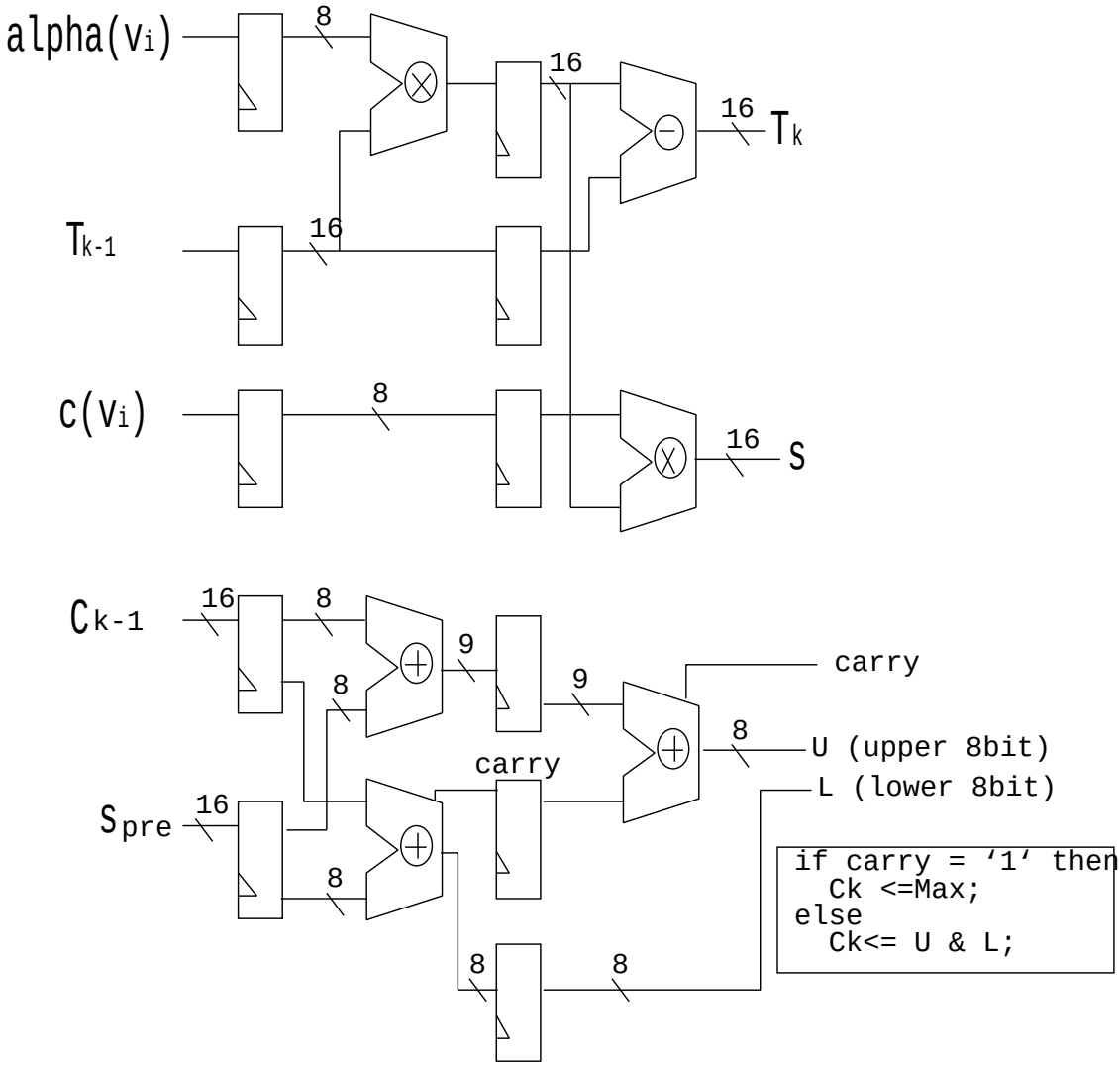

?^23: PCS 9=@.

4.4.2 Look up Table

Look up Table $O%\%j%e!<%'%G!<%?$rR,G,B,α NCMKJQ4$9$k$?$a$N%F!<%V%k$G!$PCU $+$iKh%5%$%/%k"%/%;%9$,$"$k!%$=$N$?$a9bB.%*%s%A%C%W$N%a%b%j (BRAM) $r;H$C$F9=@.$9$k!%

Look up Table $O8bit(256%(%s%H%j) $N%\%/%;%kCM$rR,G,B,α 3F8bit $N32bit %G!<%?$KJQ4$9$kNG!$$=$NMFNL$O$256 \times 32 = 8Kb$ KJ$k!%3$l$OSelectRAM

%V%m%C%/$r1 %V%m%C%/$rMQ$$$FBRAM $G<B8=$9k3H,G-$k!%%G!<%?I}$,
32bit G"kN$G!$4.3.1 9 '$G=R$Y$?@-<A$h$j!$Look up Table $K;HMQ$7$?BRAM
$KG[@~$r6&M-7F$$$k9bB.>h;;4o$O;HMQ$9k3H,G-$J$$!%$^$?!$Look up
Table XNwrite MW5a$O!$2D;k2=%Q%i%a!<%?@_Dj;~N_JN$G!$0J8e$Oread MW
5aN_HJk?$a%7%s%0%k%]!<%H%a%b%j$H7?!%

4.4.3 %W%j%U%'%C%A%P%C%U%!

- MW5a;EMM

  %W%j%U%'%C%A%P%C%U%!$bLook up Table $HF1MM$KKh%5%$%/%kread MW5a$,$"
  k?$a9bB.$J%a%b%j$G9=@.$9kI,MW,$"$k!%
  1Kg$N2hA|@8@.$K$*$$F!$0lEY;2>H$5lJ$/$JC?H>C10L%V%m%C%/$O?t%9
  %-%C%s%i%$%sJ,$N%G!<%?$,3JG<$G$-$kDxEYBg$-$J%W%j%U%'%A%P%C%U%!$rMQ
  0U7J$$$8B$j!$<!$N;2>H$NA0$K%W%j%U%'%C%A%P%C%U%!$+$iDI$$=P5l$F$$
  kH9M$($ilk!%2f!9$O400$^3DxEY$N%\%j%e!<%'%G!<%?$N2D;k2=$r9M$(F*
  $j!$$=Nh$&$JBg5,LO$J%W%j%U%'%C%A%P%C%U%!$rMQ0U7F$*$/3H$O8=<B
  E*GJ$!%$=N?$a%W%j%U%'%C%A%P%C%U%!$NMFNL$OFCJLBg$-$/$9kI,MWO
  $J$$!%$^$?%W%j%U%'%C%A%P%C%U%!$K=jK>$N%G!<%?,4^$^$l$F$$$kH>C10L%V
  %m%C%/$,B8:_$9k+I&$+$NH=Dj$r9T$&;~$O!$MFNL$,>.$5$$$[$I9bB.%"%/
  %;%9$,2DG=$HJk!%3li$NM}M3$h$j%W%j%U%'%C%A%P%C%U%!$NMFNL$OH>C1
  0L%V%m%C%/$r4$D3JG<G-$kDxEY$H7?!%
  <!$K!$%W%j%U%'%A%P%C%U%!$r9=@.$9$kBRAM $N%G!<%?$K$D$$F9M$($k!%
  %W%j%U%'%C%A%P%C%U%!$O%\%j%e!<%'%a%b%jB&$+iN%G!<%?$N=q$-9~$_$HPCU
  B&$+$i$N%G!<%?$NFI$_9~$_$,$7P7$P9T$olk$?$a!$N>%"%/%;%9$rF1;~$K
  9T$&$3H,G-kh$&$K!$BRAM $N%G%&"%k%]!<%H5!G=$rMxMQ7F<B8=$7
  $?!%2$D$N%]!<%H$O=l>lFI_9~$_@lMQ!$5Z$S=q$-9~$_@lMQ%]!<%H$H$7
  $?!%%W%j%U%'%C%A%P%C%U%!$+iN%G!<%?NFI_=P7O1%P%$%H$:$D9T$o$l
  kN$G!$FI$_9~$_B&$N%G!<%?$I}$O8bit H7$?!%0J2<GO=q$-9~$_%]!<%H$N
  %G!<%?$I}$K$D$$F9M$($k!%
  %\%j%e!<%'%a%b%j$O%@%V%k%G!<%?%l!<%H$G$"$k$a!$l%5%$%/%k$"$?$j16
  %P%$%H$N%G!<%?rFI_=P7r9T$&!%%\%j%e!<%'%a%b%j$+$i<h$j=P7?%G!<
  %?$O2$D$N%W%j%U%'%C%A%P%C%U%!$KJ,G[9kNG!$3F%W%j%U%'%C%A%P%C%U%!
  KO1%5%$%/%k$"$?$j8%P%$%H$N%G!<%?,FO$/$3HKJk!%

- LdBjE@

FO$$?64bit $N%G!<%?$r$=$N$^$^%W%j%U%"%C%A%P%C%U%!$K3JG<$9k?aK$O
%W%j%U%"%C%A=q$-9~$_B&$N%G!<%?$r64bit I}K7J/FOJi$J$$!%7$+$7!$
Virtex-II %G%P%$%9$NBRAM $O4.3.1 9 `$G=RY?h&$K18bit $rD6$($k%G!<
%?I}GO$=$NBRAM $HG[@~$r6&M-7F$$k$r9bB.>h;;4o$r;HMQ9k3H$,
G-$J$$!%$^$?!$BRAM $O%G!<%?I}$,36bit 0J2<$^$G$OSelectRAM %V%m%C
%/1 DG9=@.9k3H$,2DG=$@$,!$$=$l0J>e$G$O%G!<%?I}$,36bit A}2C$9
k4HK;HMQ9k%V%m%C%/?t$,1 $DA}2C$9$k!%$D$^$j64bit $N%G!<%?I}$N
BRAM $r9=@.$9k?aK$OSelectRAM %V%m%C%/$,2 %V%m%C%/I,MWG"$k
3H$,J,$+$k!%
7k6I!$PCU $r8 CJO"7k9=@.$K9k2sO)K*$$$F!$%W%j%U%"%C%A%P%C%U%!$N
%G!<%?I}$r64bit K9k?aKI,MW$JSelectRAM %V%m%C%/$NAm?t$O!$Look
up TableMQ$K8 8D!$%W%j%U%"%C%A%P%C%U%!MQ$K16 8D$G24 8DHJ$k!%XC2V
%G%P%$%9$K$O9bB.>h;;4o$,40 8DAuHw5l$F$$k$,!$>e5-$N5DO@$h$jBRAM
$HG[@~$r6&M-7F$$k>h;;4o$OA4$F;H$&$3H,G-$J$$!%$=$N$?$a;HMQ$G
$-$k9bB.>h;;4o$O16 8D$HJj!$$3lOK\MhI,MW$J32 8D$KE~D15ZPJ$$8D
?tG"$k!%

- 2r7h:v
  %W%j%U%"%C%A$+$iNFI_=P7O@h$[$I$b=R$Y$?$h$&$KKh%5%$%/%kI,$:9T$o
  lk!%7+$7!$=q$-9~$_$O%\%j%e!<%`%a%b%j$+$i%G!<%?$r<hCF$/$k:]$K
  5/3k$,!$$3lO%W%j%U%"%C%A%P%C%U%!(@53NKO%W%j%U%"%C%A%3%s%H%m!<
  %i)$,J#?t$"$k!$Kh%5%$%/%k9T$olk3HOJ$!%0lEY=q$-9~$_$,$*
  3k$H8 %P%$%H$N%G!<%?$,2 %5%$%/%k$Ko?CFO"B3$7$FAwilF/k,!$
  $=$N8e$O%\%j%e!<%`%a%b%j$X$N%"%/%;%9BT$A>uBVKJCF$$k$H9M$(il
  $k!%1 DN%W%j%U%"%C%A%3%s%H%m!<%i$,$=l>$l2 %5%$%/%k$+$1$F%G!<%?$r
  FI$_9~$`$?$a!$$3$N%"%/%;%9BT$A;~4V$O3F%W%j%U%"%C%A%3%s%H%m!<%i$,=g
  HV$K%\%j%e!<%`%a%b%j$K%"%/%;%9$9$k$H9M$(kHJ?6Q7F8 %5%$%/%kJ,Dx
  EY$"$k$H9M$(il$k!%=$3$G!$FI$_=P$7$?%G!<%?$O=$N4V3VFb$G%W%j%U%"%C
  %A%P%C%U%!$K3JG<$9lP$h$$$3HKJj!$%W%j%U%"%C%A%P%C%U%!$N%G!<%?I}
  $r64bit 0J2<$K7FbBg-$J;Y>c$O$J$$$H;Wol$k!%
  $^$:!$%G!<%?I}$r32bit K9k3Hr9M$($k!%32bit K9kH%\%j%e!<%`%a
  %b%j$+$iF@il$?16 %P%$%H$N%G!<%?$r%W%j%U%"%C%A%P%C%U%!$K3JG<$9kN
  $K4 %5%$%/%k$+$+k?$a!$>e$G=R$Y$?8 %5%$%/%kFb$K<}$^CF$$k!%$^$?

64bit $+$i32bit K9k3HG!$%G!<%?I}$,36bit 0J2<KJ$j!$3F%W%j%U%'%C %A%P%C%U%!H7$EMQ$$$kBRAM $OSelectRAM %V%m%C%/18D$G9=@.9k3H $,$G$-$k!%7+$70MA3$H7F18bit hjOBg-$$$?$a!$BRAM $HG[@~6&M- Nr9bB.>h;;4o;HMQ9k3H$,$G$-$J$$!%$=$N7k2LBRAM $N8D?t$O16 8D $H:o8:$G$-$?$,!$;HMQ2DG=$J9bB.>h;;4o$O24 8DG"$j!$$^$@ITB-$7$F$$$k!% <!$K%G!<%?I}$r16bit K9k3Hr9M$($k!%16bit K9kH!$%G!<%?$r3JG< 9kNK32bit $N;~$KMW7?4%5%$%/%k$N2G\$N8%5%$%/%k$+$+$k!%3NCM b.j.$j5vMFHO0O$H8@GF$h$$!%5iK!$%G!<%?I}$,16bit JN$G!$%W%j %U%'%C%A%P%C%U%!$OSelectRAM %V%m%C%/18D$G9=@.9k3H$,$G$-$k!%$^$? %G!<%?I}$,18bit 0J2<$G$"$kNG!$$3$NBRAM $HG[@~6&M-$7$F$$$k9bB.>h ;;4o$b;HMQ2DG=$G$"$k!%$=$N$?a;HMQ2DG=$J9bB.>h;;4o$O!$Look up Table $K;HMQ$7$?BRAM $HG[@~6&M-$7$F$$$kbN$r=|$/32 8DHJ$j!$%T%/%;%k CM7W;;=hM}GI,MWJA4FN>h;;4o$O9bB.>h;;4o$rMQ$$$F<BAu9k3H$,$G $-$?!%

4.4.4 %N!<%I

%N!<%IHO<gH7$FPCU!$Look up Table 5Z$S!$%W%j%U%'%C%A%P%C%U%!$G9= @.$5lk%b%8%e!<%kN3Hr;X$9!%FbIt$N9=@.$O?^24 Nh$&$KJk!%

%G!<%?$,4{$K%W%j%U%'%C%A%P%C%U%!$K%W%j%U%'%C%A$5lF$$$k$H!$$^$:$*pfb_read_addr KFI_=P7?$$\%/%;%k$N%"%I%l%9$,AwilF/$k!%$=$N%"%I%l%9$+$i8bit $N %\%/%;%kCM(vox) $,FI$_=P5l!$Look up Table KAwilk!%Look up Table $G O=$N%\%/%;%kCM$,32bit $NRGBα >pJs$KJQ49$5$l=PNO5l$k!%F@$il?32bit >pJs$OR,G,B,α $=$l$>$l18bit EDJ,3d5l!$PCU KEO5lk!%PCU GO3N CM$r;HCF%T%/%;%kCM7W;;$r9T$&!%

we, 5Z$S*we2*?.9f$O$=$l$>$lLook up Table, 5Z$S%W%j%U%'%C%A%P%C%U%!$N%i %$%H%$M!<%V%k?.9fG"$j!%*init*?.9f$OLook up Table $r=i4|2=$9$k:]$N%"%I%l %9F~NO$N@Z$j49$($K;HMQ9k!%*pfb_in* $H*pfb_write_addr* $O%W%j%U%'%C%A%P%C%U%! $K%G!<%?$r=q$-9~$`:]$N%G!<%??.9f$H%"%I%l%9?.9fG"$k!%

4.4.5 8CJ%Q%$%W%i%$%s9=@.

VisA Pro $NFbIt$O$OA09`$G=RY?%N!<%I$r%N!<%I$+$i%N!<%I8$^GJBY$? 9=@.$KJC$F$$$k!%

H3mG!$<0(12)$NBh0l9`$HBhFs9`$N2C;;$O<!$N%N!<%I$G7W;;9kN@$,!$ %N!<%I8Ob$&<!$N%N!<%I,B8:_7J$$$?aJL$K7W;;$7J/FO$$1$J$$!%$=

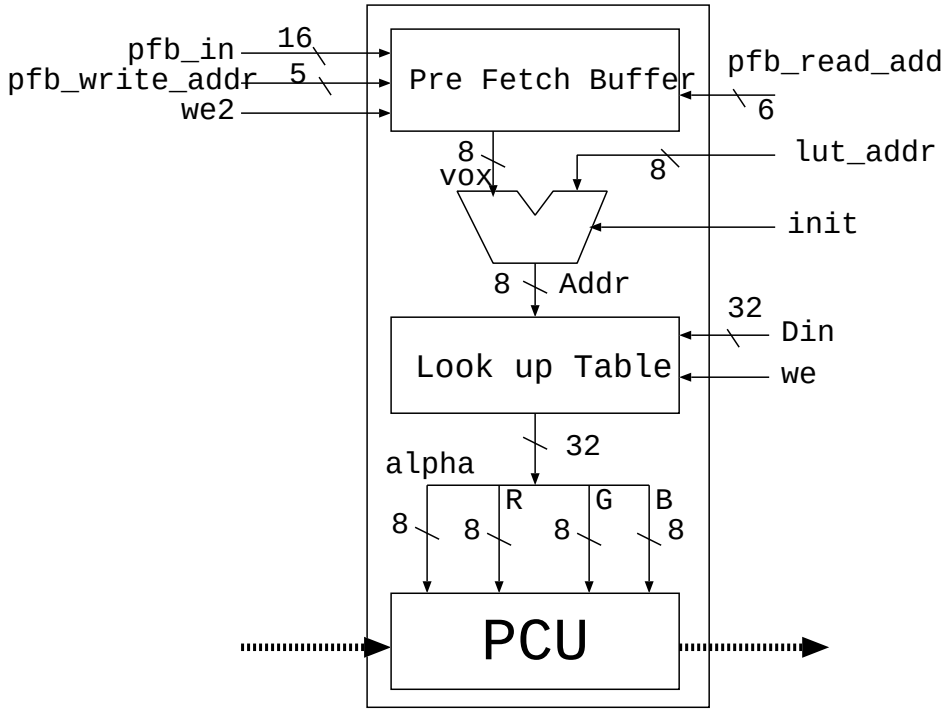

?^24: %N!<%I9=@.

3G!$?^25 $K<($92 DNJ}K!KD$$$F9M$(B$k!%

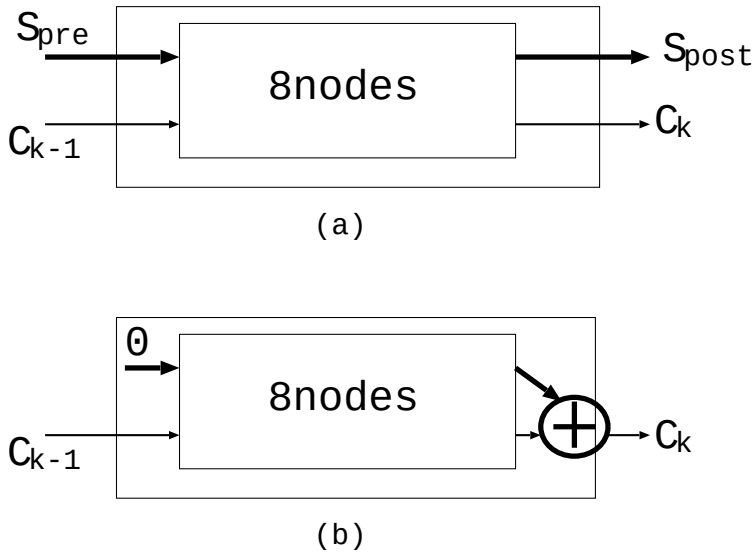

?^25: 8CJ9=@.

$^$:?^25(a)$NJ}<0$O%N!<%I8N"HOb&%N!<%I$,B8:_$7$J$$$?$a!$%N!<%I8GN7W;;7k2L$O<!$NVisA$N%N!<%I1$KEO5l$k!%=$7$F%N!<%I1$G$ONY@\

%N!<%I$+$iAwilF-$?%G!<%?$r=hM}9k!%(a) $NJ}<0$G$OM>J,$K2sO)$rIU2C$9kI,MW,$J$$$,!$NY@a%N!<%I$X$N%G!<%?E>AwNL$,A}2C7F7^$&!%A}2CNL$OR,G,B $=$l$>$l2 %P%$%H$EDG9g7W6 %P%$%H$KJk!%

<!$K(b) $NJ}<0$G$O!$%N!<%I8 $N8e$K2C;;2sO)$rIU2C$7!$<0(12) $NBh0l9'$HBhFs9'$N2C;;$r5;F+iNYN%N!<%IKAwk!%$=$N7k2L%N!<%I1 $KF~NO$5lkC_{k-1} O=N^$^%N!<%I2 KEO;Ph$$$?$a%N!<%I0 NS_{pre}$ $O0 H7$?!%3N2C;;2sO)$O5,LO$b>.5/MF0W$KEk:\$G$-$k$?$a!$2f!9$O(b) $NJ}<0$r:NMQ$7!$%M%C%H%o!<%/$NIi2Y$r7Z8:7?!%

:n@.7?2sO)$r!$Viertex-II %7%j!<%:$NXC2V1000 %G%P%$%9>e$K<BAu$9kH%2!<%H?t$O125 K|DxEY$HJC$?!%1 %N!<%I$G15 K|5 @i%2!<%HDxEYG"$j!$$=N&$APCU ItJ,$O2 K|4 @i%2!<%HG"C?!%

4.4.6 F0:nB.EY$N9bB.2=

2f!9$O:G=*E*$K$OSHD 5,3J$G$"$k2048^2 $N%9%/%j!<%s$KKhIC30 %U%l!<%\=PNO9k3H$rL\I8$H7F$$$k!%=$N?$aKI,MWJF0:n<~GH?t$O128MHz G"$k!%$5iK!$PCI %P%9$NF0:n<~GH?t33MHz G"$j!$$3$N<~GH?t$N@0?tG\$N%/%m%C%/$r;H$&3H$,K>$^$7$$!%$^$?DDR SDRAM266 $N@-G=$r%U%k$KH/4x$9k?aK$O133MHz $NF0:n<~GH?t$,I,MWG"$k!%0J>e$NM}M3hj<BAuK*$$$FF0:n<~GH?t$NL\I8CM$r133MH H7$?!%

I>2A4D6-$O0J2<$NDLjG$"$k!%

I=3: I>2A4D6-

CPU	Intel Pentium4
OS	Windows2000
%a%b%jMENL	512MB
CAD	Xilinx FondationF4.1i

<+F0G[CVG[@~$@$1$r9T$C$?7k2L89MHz $GF0:n2DG=$HJC$?!%133MHz $[$I$NF0:nB.EY$r<B8=9k$?$aKO%2!<%HCY1d$@$1GJ$/!$G[@~CY1d$b==J,9MN8$9kI,MW,$"$k!%

Virtex-II %7%j!<%:XC2V1000 %G%P%$%9$G$OselectRAM %V%m%C%/!$5Z$S9bB.>h;;4o$O?^26 $N9u$$ItJ,$K<($7$?0LCV$K!$10 8D$:$D7W40 8DG[CV$5lF$$$k!%l

%N!<%I$"$?$j;HMQ$9$kSelectRAM%V%m%C%/$OLook up Table$H%W%j%U%"%C%A%P%C%U%!$G9g7W2$D!%9bB.>h;;4o$O4DG!4DN&$A1$D$@$1$O%W%j%U%"%C%A%P%C%U%!$G;HMQ9kBRAM$HG[@~6&M-$7$F$$k>h;;4o$rMQ$$k!%7k6I1%N!<%I$"$?$j5$D$NSelectlRAM%V%m%C%/NN0h$r;HMQ9k!%=3G?^27(a)Nh$&$K!$;HMQ$9$kSelectRAM%V%m%C%/$,%N!<%I4HK+$?$^kh$&$KG[CV;XDj$7!$<+F0G[CVG[@~$r9T$C$?!%=$N7k2L?^27(b)$K<($9h&$K!$%V%m%C%/SelectRAMN_Ji$:!$%N!<%IF'b$NB>$N2sO)$b%N!<%I$4HK$+$?$^$C$FG[CV$5$l!$l16MHz$GF0:n2DG=$HJC$?!%

$=$N8e5i$K%/%j%F%#%+%k%Q%9>e$NItIJ$NG[CV$rFloorPlanner$H$$$&%D!<%k$rMQ$$F>/7E$D<jF0$GJQ9$7$?!%FloorPlanner$H$O%^%&%9$G%I%i%C%0&%I%m%C%W$9k3HG%?!<%2%C%HH9$k%G%P%$%9XN%G%6%sNG[CV$r@)8f$9k3H,G-$k%0%i%U%#%+%kG[CV%D!<%k$G$"$k!%FloorPlanner$rMQ$$$k3H$G:G=*E*$K133MHz$GF0:n2DG=$HJC$?!%

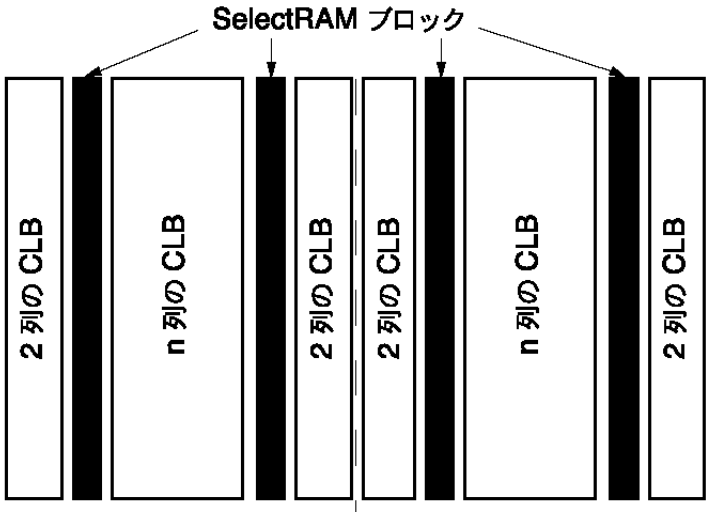

?^26: seletRAM%V%m%C%/$NG[CV

4.4.7 VisA Pro$X$N3HD%

4.4.3@a$G=R$Y$?$h$&$K!$%W%j%U%"%C%A%P%C%U%!$N%G!<%?I}$r64bit$K7?>l9g!$l%N!<%I$KMW9k%V%m%C%/SelectRAM$O9g7W78D$G$"$k$?$a!$l6CJ9=@.$K9k$?$aKI,MWJ%V%m%C%/SelectRAM$N8D?t$O1128DG"$k!%XC2V6000$K$O%V%m%C%/SelectRAM$,1448DAuHw5l$F$$$k$?$a!%W%j%U%"%C%A%P%C%U%!$N%G!<%?I}$r64bit$K$7Fb<BAu2DG=G"$k!%

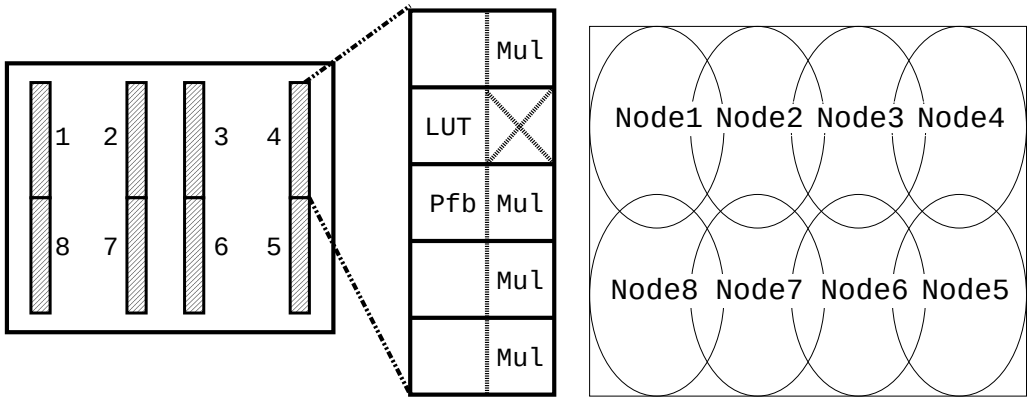

(a) >h;;4o5Z$S!$BRAM $NG[CV;XDj (b) 3FPCU 4H$NG[CV>u67

?^27: FPGA >eXN<BAu

$^$?!$:#2s$NI>2A%\!<%IXN<BAuGO!$9bB.>h;;4o$N8D?tIIB-hj3.1@a$G=R$Y$?!$;k@~J}8~$,Ii$N>l9g$NJd@52sO)$O4^aF$$J$$!%Jd@52sO)$O3.1@a$N<0(5)$N7W;;1CJJ,$KAjEv9k!%3$N2sO)$K$O>h;;4o$,4DI,MWG$"$k$H9M$(ilk,!$XC2V6000$KAuHw5l$F$$k>h;;4o?thj9M$($F!$=>J,<BAu2DG=$G$"$k3H$,8@$($k!%

Bh5>O 9M;!

K\>OGO0J2<$N2E@$K$D$$F9M;!9k!%$^$:$O:#2s$N2f!9$N<BAu$K$O:NMQ$7J+G?!$A4%\%j%e!<%'%G!<%?$N3=E2=r7JJ}<0(3.3.2@a)$N<BAuJ}K!$K$D$$F9M;!9k!%<!$K!$8zN(Nh$$%W%j%U%'%C%A$r<B8=$9$k5<;wF);kEj1FK!$K$D$$F9M;!9k!%

5.1 A4%\%j%e!<%'%G!<%?$N3=E2=$r7J$>l9g$K$D$$F$N9M;!

K\@aGO3.3.2@a$G=R$Y$?!$A4%\%j%e!<%'%G!<%?$N3=E2=$r7J$>l9g$N=hM}KD$$F!$VisA Fb$G$NF0:n$K$D$$F9M;!$r9T$&!%0J2<!AV4%\%j%e!<%'%G!<%?!W$O2D;k2=BP>]$HJkA4%\%/%;%k%G!<%?$r;X$9H7!$V5%V%\%j%e!<%'%G!<%?!W$O0lDN%N!<%I$+;}$C$F$$k%\%j%e!<%'%G!<%?N3Hr;X$9!%

3NVisA FbGN%5%V%\%j%e!<%'$N%l%s%@%j%s%0=hM}(0J2<!V5%V%\%j%e!<%'%l%s%@%j%s%0!W$H8F$V)GO!$;k@~$,$=$N%N!<%I$,$b$D%5%V%\%j%e!<%'$rDL$k4V$N%l%s%@%j%s%0=hM}G"kN$G!$EvA3J,iI,MWJ%G!<%?$OI,$:$=$N%N!<%I$KB8:_$9k3HKJk!%$=$N?$a!$VisA Fb$NP Bf$NPCU GNJBNs=hM}$NJ}K!$H7F!$%\%/%;%kJBNs=hM}$K2C$($F!$%T%/%;%kJBNs=hM}$r9T$&$3Hb2DG=G"$k!%0J2<$G$O3FJBNs=hM}$K$D$$F=RYk!%

- %\%/%;%kJBNs=hM}

  %\%/%;%kJBNs=hM}$OA4%\%j%e!<%'%G!<%?$r3=E2=7?>l9g$HF1MM$NJBNs=hM}J}K!$G!$P Bf$NPCU rPCU_1, PCU_2, !D, PCU_P$N0l<!85G[Ns9=@.$H7F9M$(!$;k@~>pJsrPCU_1$K<!!9$KM?$(!$%Q%W%i%sJ}<0$G7W;;$r?JaF$$/J}<0G"$k!%

- %T%/%;%kJBNs=hM}

  %T%/%;%kJBNs=hM}OG$O!$3FPCU $,;k@~7W;;$rJBNs$K9T$&J}<0G"$k!%3FPCU $O;k@~$,%5%V%\%j%e!<%'FbK"$k4V7W;;$7!$3:Ev%N!<%I$N%5%V%\%j%e!<%'Fb$N=hM}$,=*C?$i?7$7$;k@~$N7W;;$r;O$akH$$&J}<0G"$k!%

%\%/%;%kJBNs=hM}$r<B8=$9$kJ}K!$H7F!$%5%V%\%j%e!<%'%G!<%?$N3=E2=r9k3$H,9M$(il$k!%$3$NJ}<0$OA4%\%j%e!<%'%G!<%?$r3=E2=$9$k>l9g$HHfYF!$%a%b%j>CHqNL$OF1$8$G$"$k,!$<+J,$N%N!<%IFb$@$1$G%G!<%?$N3=E2=$r9T$&NG!$%G!<%?$N99?7;~4V$,%\%j%e!<%'%G!<%?$N3=E2=r7$J$$>l9g$HF1MM$K9bB.KG-$k!%

A4%\%j%e!<%‘%G!<%?$r3=E2=$9$k>l9g$O!$3FPCU $NC4Ev$O1%9%i%$%9J,$G$"$C$?$,!$%5%V%\%j%e!<%‘%G!<%?$N3=E2=GO!$3FPCU $OJ#?t%9%i%$%9$rC4Ev$9k3HKbJ$k!%$=$NJ#?t$N%9%i%$%9$r!¥9%i%$%972!W$H8F$V!%A4%\%j%e!<%‘%G!<%?$N3=E2=K*$$$F!$3FPCU $OC4Ev$9$k%9%i%$%9$,8GDj$5lF$$?NHF1MM$K!$%5%V%\%j%e!<%‘$N3=E2=$G$O3FPCU $,C4Ev$9$k%9%i%$%972$,8GDj$5lk$?$a8zN(Nh$%W%j%U%"%C%A$r9T$&$3H,G-kH9M$($ilk!%

2sO)$N9=B$$H7F$OA4%\%j%e!<%‘6u4V$N3=E2=$N;~$Nh&KPCU_iGN7W;;7k2L$OI,$:PCU_{i+1}KEO5lkNGOJ/!$3FPCU $O%9%i%$%972$N%9%i%$%9$N?t$K1~8F<+J,NJ$+$G7+jJV77W;;$r9T$&I,MW$,$"$j!$$=N?a$NH=Dj=hM}$H%k!<%W%P%C%/9=B$$,I,MWHJ$k!%

H3mG!$3FPCU XN%G!<%?F~NO$OA0CJ$NPCU $+$i$N%G!<%?$H<+J,$N7W;;7k2L$+iN%k!<%W%P%C%/$N2DL$jKJ$k!%%\%j%e!<%‘%G!<%?$N%5%$%:$,N^3G$"$l$P!$PCU FbGN%k!<%W%P%C%/2s?t$O:GBgN2s$KJk!%2>$K@h9T$9$k;k@~$,3Nh&$JN2s%k!<%W$N;k@~G"$j!$8eB3$N;k@~$O02s%k!<%W$N;k@~$G$"$C$?>l9g!$%Q%$%W%i%$%sO^C?$/F0:n$7J/JCF7$^$&!%7$+$7!$%k!<%W2s?t$N;k@~$+$iF~<M9kJI!$;k@~$NF~<M$r9)IW$9k3HG$=$Nh&$K;vBV$O2sHrG-kG$"$m$&$H;Wol$k!%

<!$K%T%/%;%kJBNs$K$D$$F9M$($k!%%T%/%;%kJBNs=hM}$NMxE@$H7F$O%G!<%?$,%W%j%U%"%C%A%P%C%U%!K"lP!$%\%/%;%kJBNs=hM}$Nh&$K!$PCU 4V$G@h9T;k@~$N;$$$G;k@~$,BT$A>uBVKJkH$$&3H$O*$-$J$$3H,$"$2il$k!%$^$?!$%6u$$F$$kPCU $K=hM}$r3d$j?6$k$H$$&%"%k%4%j%:%‘$r;H$C$F$$l$P!$;k@~4H$KPCU GN=hM};~4V$,$PiD$$F$$F$bB>$NPCU $N=hM}$K1F6A$rM?$(k3H,$J$$!%

7+$7!$%T%/%;%kJBNs=hM}GO0lDNPCU $,07$&G!<%?$,%\%/%;%kJBNs$KHfYFIT5,B'JN$G!$%W%j%U%"%C%A$N8zN($,0-$/$JCF7^$&$H$$&7gE@$,$"$k!%;k@~$NF~l+$?$r9MN8$7%Q%$%W%i%$%s$rJk$Y/$HaJ$$h$&$K9l$P!$%W%j%U%"%C%A$N8zN($Nh%\%/%;%kJBNs=hM}N[$&$,M-MxG"kH9M$($ilk!%

5.2 5<;wF);kEj1F

VisA GOJB9TEj1F!$5Z$S1s6aK!$rMxMQ$7$?F);kEj1F$NN>J}$NEj1FK!$r%5%]!<%H7F$$k!%F);kEj1F$GIA2h$7$?[$&$,?M4V$,8+k?aK$O<+A3$J2hA|KJ$k!%$7$+$7!$VisA GOJB9TEj1FG"lP;k@~%Y%/%H%k$,A4$FF1$8J}8~$G$"$k$?a!$

F);kEj1FKHfY$F%W%j%U%'%C%A$,7d9/9bB.F0:n$,4|BT$G$-$kMxE@$,$"$k!%

$=$3$G!$VisA GOF);kEj1F$K6a$$2hA|rG$-$k$@$19bB.$KIA2h$9k?aK!$JB9TEj1F$HF);kEj1FrAH_9go;$?J}<0(0J8e!$5V<;wF);kEj1F!W$H8F$V)$GIA2h$9$kJ}<0$r:NMQ9k3H$r9M$($F$$$k!%0J2<5<;wF);kEj1FKD$$F=R$Y!$VisAGNE,MQ8z2LKD$$F9M;!9k!%

5<;wF);kEj1FGO;k@~$OF);kEj1F$Nh&$K!$;kE@$+$i%9%/%j!<%s$K8~$1$FJ|<M@~>u$K=P$9!%%9%/%j!<%s$O%T%/%;%k$N=89g$G$"$k$,!$$"$k%T%/%;%k$H$=$N6a

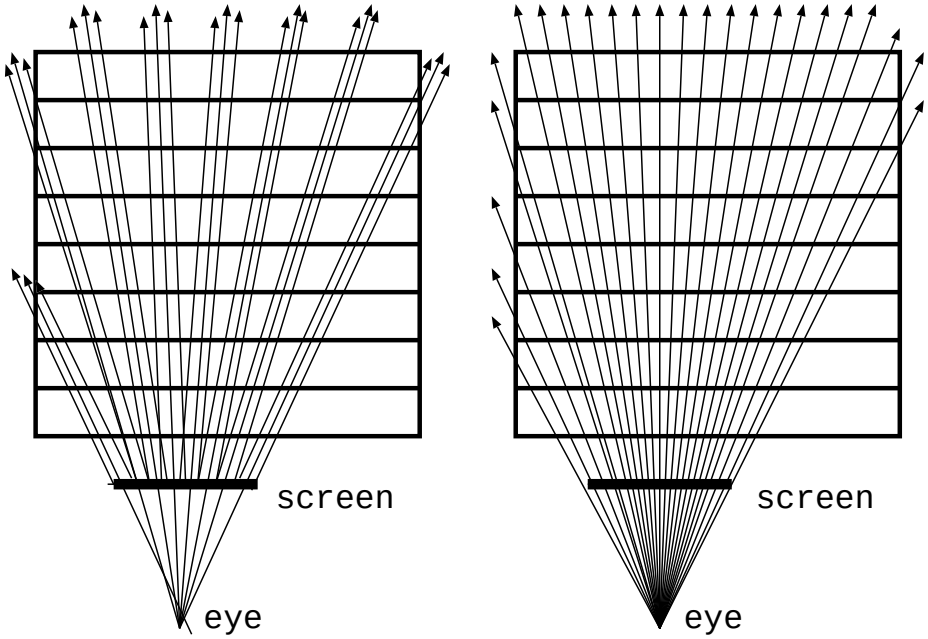

?^28: 5<;wF);kEj1F

K5K"$kJ#?t$N%T%/%;%k$r0l$D$N%0%k!<%W(0J8e!%¥5%V%9%/%j!<%s!W$H8F$V)H7!$;k@~%Y%/%H%k$O3N$=$l$>$l$N%5%V%9%/%j!<%s$KBP7F0lK\@8@.9k!%$=$7$F%5%V%9%/%j!<%sF'b$N3F%T%/%;%k$N;k@~%Y%/%H%k$O$=$N;k@~$KJB9T$G$"$k$H9M$(kN$,5<;wF);kEj1F$G$"$k!%5<;wF);kEj1FGO%5%V%9%/%j!<%sF'b$OJB9TEj1F$G9bB.=hM}$r9T$CF*$j!$%9%/%j!<%sA4BN$r9M$(lPF);kEj1FKJ$k!%

?^28$N:8$,5<;wF);kEj1F$r9T$C$?>l9g$N;k@~$NMM;R$G1&B&$,$bHNF);kEj1F$NMM;R$G$"$k!%

$S \times S$$N%9%/%j!<%srP \times P$$N%5%V%9%/%j!<%s$KJ,3d$9$k>l9g!$1 \leq P \leq S$$HJCF*$j!$P = 1$$N;~$,F);kEj1F$G!$P = S$$N;~$,JB9TEj1F$KBP1~7F$$

$k!%?^28:8$N5<;wF);kEj1FGOS!P=3!1$N>l9g$G$"$k!%5<;wF);kEj1F$O S:P$NHfNCM,?t==G\$,$i?tI4G\$HBg$-$1lP!$F);kEj1F$K6a$$@:EYNh$$ 3($,=P$k$H9M$(il$k!%

VisAGOSNCMH7F1024$d2048DxEY$r9M$($F$$$k!%$^$?PNCMH7F$O P×P$,%W%j%U%"%C%A$N:]$NItJ,C10L%V%m%C%/$N%5%$%:HJk/$i$$$,BEEv$G $"$k$H9M$(il$k!%ItJ,C10L%V%m%C%/$N%5%$%:$r4!_4H7$?>l9g$O!$S:P$N HfNCM,256!$$"$k$$$O1024$H$$$C$?Bg$-JCMHJk$?$a!$@:EY$N$h$$2hA|$, 4|BT$G$-$k!%

Bh6 >O $^$H$a

2f!9$O!$%7%_%e&l!<%7%g&s$HO"7H$7$?Bg5,LO%G!<%?$N2D;k2=$r<B8=$9$k!$JB Ns%\%j%e!<% '%l%s%@%j%s%04D6-$N9=C[$rL\;X$7!$8&5f$r9T$C$F$$k!%4D6-$N9= C[$NJ}K!H7$F!$2D;k2==hM}KBP7FIl@1NEj;q$,2DG=$+$K1~$8$F,$$$/$D $+$NJ}K!$,9M$(il$k!%K\9F$GO=NCfG!$@lMQ%O!<%I%&%'%"VisA Kh$kJBNs %\%j%e!<% '%l%s%@%j%s%0=hM}KD$$$F=RY?!%

VisA GO%\%j%e!<% '%G!<%?$r%9%i%$%9$KJ,3d$7!$J#?t$N%9%i%$%9$r%5%V%\ %j%e!<% 'H7$FPC %/%i%9%?$N3F%N!<%IKb$?$;kH$$&%G!<%?J,3dK!$GJBNs =hM}$r9T$&!%$=Nh$&$JJBNs=hM}4D6-K*$$$FM-MQ$J!$%T%/%;%kCM7W;;J}K!5Z $SEarly Ray Termination KD$$F=RY?!%

$^$?2D;k2=J}K!H7FO!$%\%j%e!<% '%G!<%?$N3=E2=$r9T$o$J$$J}K!$H3=E 2=$r9T$&J}K!$rHf3S$7!$N><T$NM%Nt$r8!F$$7$?!%

$=$7$F!$VisA $N%3%"ItJ,$G$"$k%T%/%;%kCM7W;;ItJ,$rXILINX <R$NFPGA G"$kVirtex-II $rMQ$$$F@_7W7?!%%T%/%;%kCM7W;;ItJ,$N=hM}$KVirtex-II $N SelsevRAM %V%m%C/$r;HMQ7?9bB.>h;;4o$rMQ$$!$$=li$r8zN($h$/G[CV$9k3 HG,%a%b%j%b%8%e!<%kG"$kDDR SDRAM $N4pK\F0:n<~GH?t$G$"$k133MHz $G2sO)$rF0:n5;k3H,$G-$?!%:#8e$O3$N%T%/%;%kCM7W;;ItJ,$K2C$(!$K\9F $GDs0F$7$?%W%j%U%C%A5!9=$r<B:]$K<BAu$7!$VisA $N%W%m%H%?%$%WG"$kVisA Pro $r40@.$5$;$k!%

<UK-

K\8&5f$N5!2q$rM?$($F$/$@5C$?!$IYEDbC<#65<x$K?<$/46<U$N0U$rI=7^$9!%

?t!9$NM-MQ$J8f;XF3!$8f0U8+$rD:$$$?!$?9bC0lO:=u65<x!$8^Eg@5M5=u<j$K?4$+$i46<UCW$7$^$9!%

K\8&5f$N6&F18&5f<T$G$"$k9b;3@,Bg;a!$4];3M*<y;a!$CfEDCR;K;a!$$=7F%3%s%T%e!<%?9)3X9V:B7W;;5!%"!<%-%F%/%A%cJ,Ln$N=t;a$K46<UCW7^$9!%

$^$?!$VisA%+!<%I$N@=:nKEv?CF$OEl5~%(%l%/%H%m%s%G%P%$%9(3t)$N@iLn;a,;3ED;a,Hx2V;a,>.EDEg;aK46(NCD:$$$?!%=t;a$K?5$s$G46<U$$$?7^$9!%

;29MJ88%

[1] UtGOM:<!B>, "%\%j%e!<%`!&l%s%@%j%s%0@lMQJBNs7W;;5!ReVolver $N%"!<%-%F%/%A%c", >pJs=hM}3X2qO@J8;o, Bh36 4,, Bh7 9f, pp.1709-1718, 1995.

[2] 5HC+D><yB>, "%\%j%e!<%`%l%s%@%j%s%0@lMQJBNs7W;;5!ReVolver/C40 $N@-G=I>2A", >p=h8&Js9p, 99-ARC-132, pp.79-84, 1999.

[3] Philippe Lacroute and Marc Levoy, "Fast Volume Rendering Using a Shear-Warp Factorization of the Viewing Transformation," Proc. of SIGGRAPH'94, pp.451-458, July 1994.

[4] 86@%;KLwB>, "?tCM%7%_%e&l!<%7%g%s2aDx$N<B;~4V2D;k2=$r;Y1g9k%O!<%I%&%'%"", 2D;k2=>pJs%7%s%]%8%&%`,2002.7.

[5] ;3K\6390B>"M-8BMWAGK!$rMQ$$??4B!BgF0L.$N?(?G%7%e&_%l!<%7%g%s", F|K\%P!<%A%c%k%j%"%j%F%#3X2qBh6 2sBg2qO@J8=8, 2001.

[6] L.Chen, I Fujishiro, and K Nakajima, "Parallel Performance Optimization for Large-Scale Unstructured Data Visualization for the Earth Simulator", *Proc. of Parallel Graphics and Visualisation*, pp.133-140, 2002.

[7] C. Rezk-Salama, K. Engel, M. Bauer, G. Greiner, T. Ertl, "Interactive Volume Rendering on Standard PC Graphics Hardware Using Multi-Textures and Multi-Stage Rasterization", In Proc. Eurographics/SIGGRAPH Workshop on Graphics Hardware, 2000.

[8] ;3Fb,B>, "%"%/%F%#%V%\%j%e!<%`%l%s%@%j%s%0$K4p$E$/%7%_%e&l!<%7%g%s%9%F%"%j%s%0," ?.3X5;JsCPSY2001-35, pp.1-8, 2001G/87n.

[9] "M.Levoy. Efficient Ray tracing of volume data", ACM Transactions on Graphics, Vol.9,No.3, 245-261.July 1990.

[10] @81@8x7<B>,"%5%$%/%j%C%/$K%G!<%?$rG[CV$7$?JBNs%\%j%e!<%`%l%s%0=hM}$K$*$1$kERT$N8z2I", >pJs5;=Q%U%)!<%i%`FIT 0lHL9V1iO@J8=8Bh3J,:}pp.233-234,2002.

[11] @81@8x7<B>."<B;~4V%$%s%?%i%/%F%#%V%7%_%e&l!<%7%g%sN?aNJBNs%\%j%e!<%`%l%s%@%j%s%04D6-", >pJs=hM}3X2q4X@>;YIt;YItBg2q9V1iO@J8=8pp.121-124,2002.

[12] XILINX "Virtex-II Platform FPGA handbook," December 2001.

[13] Barthold Lichtenbelt, Randy Crane, Shaz Naqvi,"Introduction To Volume

rendering",Hewlett-Packard Company,1998.

[14] D9C+@nM563!$"VHDL Kh$k%O!<%I%&%'%"@_7WF~Lg",CQ=PHG(3t),1995.

[15] JBLZ=(L@,1J0f OKF;,'VHDL Kh$k%G%#%8%?%k2sO)F~Lg", 5;=QI>O@<R (3t),2001.

[16] 6b 4nET B>, "%T%/%;%kJBNs=hM}Kh$j%\%j%e!<%`!&l%s%@%j%s%08~$-$N D69bB.@lMQJBNs7W;;5!%"!<%-%F%/%A%c;>pJs=hM}3X2qO@J8;o,Vol.38, No.9, pp-1668-1680,1997.